DR. BABASAHEB AMBEDKAR TECHNOLOGICAL UNIVERSITY, LONERE – RAIGAD -402 103

Winter Semester Examination – December - 2019

Branch: B. Tech **Sem.:- I/II**
Subject:-Basic Electrical Engineering [EE 104/EE204] **Marks: 60**
Date:-04/12/2019 **Time:- 3 Hr.**

Instructions to the Students

1. Each question carries 12 marks.
2. Attempt **any five** questions of the following.
3. Illustrate your answers with neat sketches, diagram etc., wherever necessary.
4. If some part or parameter is noticed to be missing, you may appropriately assume it and should mention it clearly

---

Q1.) **a)** Define the term resistance with its unit. Explain in detail factors on which resistance of metal conductor depends. **6M**

b) The resistance of a wire increases from 18 Ω at 20°C to 20 Ω at 50°C. Find i) The temperature coefficient of resistance at 0°C.ii) The resistance at 65°C. **6M**

Q2.) **a)** State and Explain Kirchhoff's laws. **6M**

b) In the given circuit current flowing through 15 ohm is 3 Amp. **6M**
i) Find the current flowing through 20 ohm and 30 ohm resistor.
ii) Find voltage V.

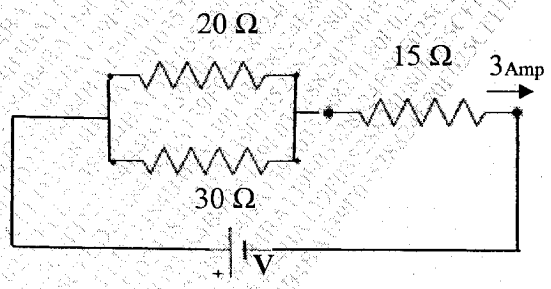

Q3.) **a)** Explain the R-L series circuit with phasor diagram, when connected to single phase ac supply. **6M**

b) Define the following terms.
1) RMS Value
2) Average Value
3) Form Factor
4) Peak Factor

OR

	b)	A pure inductor of 0.2 H connected across 230 Volt,50 Hz. .i) Find inductive reactance X_L ii) Maximum value of current iii) Find the Expression for current which will flow through inductor.	6M
Q4.)	a)	Explain the following terms for AC circuit with power triangle. i)Apparent power ii)Active power iii)Reactive power	6M
	b)	What is mean by resonance? Explain the RLC series resonance phenomenon in detail.	6M
		OR	
	b)	In a 3 phase Delta connection find the relation between line and phase value of current & voltage. Hence derive equation for power.	6M
Q5.)	a)	Write Comparison Between Magnetic and Electric Circuits.	6M
	b)	A rectangular iron core has a mean length of magnetic path of 100 cm, area of cross-section of 4 cm^2, relative permeability of 1400 and an air-gap of 5 mm cut in the core. The coil has number of turns, N= 600 and carries the current of 4 A. Find the flux in the air-gap.	6M
		OR	
	b)	Define the terms Dynamically, Statically, Self and Mutual induced emf.	6M
Q6.)	a)	State the working principle of a single-phase transformer and derive the EMF equation.	6M
	b)	A single-phase transformer of 800 primary turns and 1300 secondary turns. The primary is connected across 400 volt, 50 Hz. AC supply. Find i) The voltage induced in secondary winding. ii) The maximum value of flux density if the area of cross section is 50 cm^2.	6M
		OR	
	b)	Draw the circuit diagram and derive the equation for charging voltage of a capacitor.	6M

Paper End

DR. BABASAHEB AMBEDKAR TECHNOLOGICAL UNIVERSITY
LONERE – RAIGAD -402 103
Winter End Semester Examination: Dec. 2019

Branch: B. Tech. **Sem.:- I/II**

Subject:- Basic Electronics Engineering (EXE105/EXE205) Marks: 60

Date:- 06/12/2019 **Time:- 3 Hr.**

Instructions:-

1. Attempt any *Five* questions.
2. All questions carry equal marks.
3. Illustrate your answer with neat sketches, diagrams etc. wherever necessary.
4. Necessary data is given in the respective questions. If such data is not given, it means that the knowledge of that component is a part of examination.
5. If some part or parameter is noticed to be missing, you may appropriately assume and state it clearly in the answer-book.

Q.1. A] Describe essential features of the following bonds: 06
(a) Ionic bond
(b) Covalent bond
(c) Metallic bond

B] Explain the classification of materials with electrical engineering point of view. 06

Q.2. Attempt any *two* of the followings:

A] How does the Fermi level changes with increasing temperature in the extrinsic semiconductors (*n*- type and *p* -type)? Sketch the energy level diagram. 06

B] What is Hall effect? Calculate Hall voltage, Hall coefficient and Hall angle. 06

C] Find the built-in voltage for a *Si* P-N junction with $N_A = 10^{15} cm^{-3}$ and $N_D = 10^{17} cm^{-3}$ at room temperature with $n_i = 10^{10} cm^{-3}$. 06

Q.3 A] Sketch V_o for the circuit and the input shown. *D* is a silicone diode with cut in voltage $V_v = 0.6V$. 06

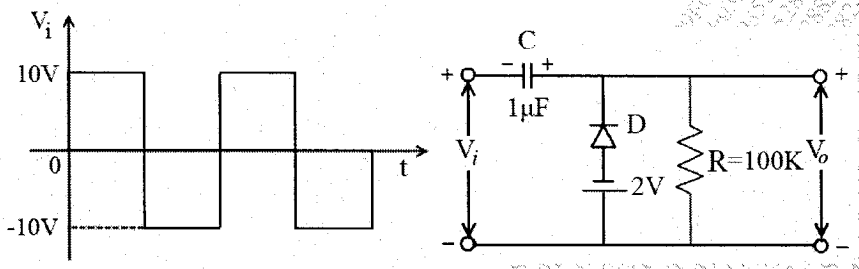

B] Write a note on depletion layer capacitance and diffusion capacitance. 06

Q.4 Define transistor biasing. List and explain different transistor biasing techniques with suitable diagram and expressions. 12

Q.5. Attempt any ***two*** of the followings:

A] Describe the working of center tap full wave rectifier with neat diagram and waveforms. Explain: Peak inverse voltage, ripple factor and efficiency with respect to a center tap full wave rectifier. 06

B] Explain different types of resistors in detail. What is the color code for 1KΩ resistor? 06

C] Describe construction and working of a LVDT. State any two advantages and disadvantages of LVDT. 06

Q.6 A] Do as directed: 06

a) Obtain 2's complement of 10111011

b) Add $(AF1.B3)_H + (FFF.E)_H$

c) Determine the floating point representation of $(-142)_{10}$ using IEEE single precision format.

B] Explain AND, OR, NAND, NOR, Ex-OR, Ex-NOR logic gates with their logic diagram and truth table. 06

********PAPER END*******

9F03528824E80F025CFED23384FC4E2D

DR. BABASAHEB AMBEDKAR TECHNOLOGICAL UNIVERSITY, LONERE – RAIGAD
Semester Winter Examination – December - 2019

Branch: B. Tech. (Common to all) **Semester: II**

Subject with Subject Code: Engineering Mathematics – II (BTMA 201) **Marks: 60**

Date: 09.12.2019 **Time: 3 Hrs.**

Instructions to the Students

1. Attempt **any five** questions of the following.
2. Illustrate your answers with neat sketches, diagrams, etc., wherever necessary.
3. If some part or parameter is noticed to be missing, you may appropriately assume it and should mention it clearly.

Q. 1

(a) If the sum and product of two complex numbers are real, show that those two numbers must be either real or conjugate. **[4 *Marks*]**

(b) Solve the equation $x^6 - i = 0$. **[4 *Marks*]**

(c) If $\tan(A + iB) = x + iy$, prove that

(i) $\tan 2A = \frac{2x}{1-x^2-y^2}$ (ii) $\tanh 2B = \frac{2y}{1+x^2+y^2}$. **[4 *Marks*]**

Q. 2

(a) Solve: $\cos^2 x \frac{dy}{dx} + y = \tan x$. **[4 *Marks*]**

(b) Solve: $(x^2 + y^2)dx - xy\,dy = 0$. **[4 *Marks*]**

(c) A body falling from rest is subjected to the force of gravity and an air resistance of $\left(\frac{n^2}{g}\right)$ times square of the velocity. Show that the distance travelled by the body in t seconds is $\frac{g}{n^2}\log\cos h\,(nt)$. **[4 *Marks*]**

Q. 3 Solve any THREE:

(a) Solve $(D^6 - D^4)y = x^2$. **[4 *Marks*]**

(b) Solve $(D^2 - 2D + 1)y = x\,e^x \cos x$. **[4 *Marks*]**

(c) Solve by the method of variation of parameters: $\frac{d^2y}{dx^2} + y = \operatorname{cosec} x$. **[4 *Marks*]**

(d) Solve: $x^2\frac{d^2y}{dx^2} - 3x\frac{dy}{dx} + 5y = x^2 \sin(\log x)$. **[4 *Marks*]**

Q. 4 Solve any TWO:

(a) Find the Fourier series of the function $f(x) = x$ in the interval $(0, 2\pi)$. [6 *Marks*]

(b) Find the Fourier series expansion for the function $f(x) = x - x^2$ in $-1 < x < 1$. [6 *Marks*]

(c) Expand the function $f(x) = \pi x - x^2$ in a half-range sine series in the interval $(0, \pi)$. [6 *Marks*]

Q. 5 Solve any THREE

(a) Find the value of the constant λ such that the vector field defined by

$\vec{F} = (2x^2y^2 + z^2)\hat{\imath} + (3xy^3 - x^2z)\hat{\jmath} + (\lambda xy^2z + xy)\hat{k}$ is solenoidal. [4 *Marks*]

(b) Find $\nabla \cdot \vec{F}$, where $\vec{F} = \left(\frac{x}{r}\right)\hat{\imath} + \left(\frac{y}{r}\right)\hat{\jmath} + \left(\frac{z}{r}\right)\hat{k}$. [4 *Marks*]

(c) Find **curl** $\vec{F}$, where $\vec{F} = \nabla(x^3 + y^3 + z^3 - 3xyz)$. [4 *Marks*]

(d) If $\vec{r}$ is a position vector with $r = |\vec{r}|$, show that

$\nabla^2 r^n = n(n+1)r^{n-2}$. [4 *Marks*]

Q. 6:

(a) Find the values of the line integral $\int_C \vec{F} \cdot d\vec{r}$ along the path

$y^2 = x$ joining the points $(0, 0)$ and $(1,1)$ provided that $\vec{F} = x^2\hat{\imath} + y^2\hat{\jmath}$. [4 *Marks*]

(b) Verify the Green's theorem for $\int_C \{(xy + y^2)dx + x^2dy\}$

where C is bounded by $y = x$ and $y = x^2$. [4 *Marks*]

(c) Show that $\iiint_v \frac{dv}{r^2} = \iint_s \frac{\vec{r} \cdot \hat{n}}{r^2} ds$. [4 *Marks*]

****************************Paper End****************************

DR. BABASAHEB AMBEDKAR TECHNOLOGICAL UNIVERSITY, LONERE – RAIGAD -402 103

Semester Winter Examination – Dec.- 2019

Branch: B. Tech. (Common to all) | **Semester:- I**
Subject:- Engineering Mathematics – I (MATH 101) | **Marks: 60**
Date:- 11/12/2019 | **Time:- 3 Hr.**

Instructions to the Students

1. Attempt **any five** questions of the following.
2. Illustrate your answers with neat sketches, diagram etc., wherever necessary.
3. If some part or parameter is noticed to be missing, you may appropriately assume it and should mention it clearly

---

Q.1

(a) Determine the consistency of the set of equations:

$x - 2y + z = -5$; $x + 5y - 7z = 2$; $3x + y - 5z = 1$. **[6 Marks]**

(b) Find the eigen values and eigen vectors of the matrix $A = \begin{bmatrix} 3 & 1 & 4 \\ 0 & 2 & 6 \\ 0 & 0 & 5 \end{bmatrix}$. **[6 Marks]**

Q.2

(a) If $y = x^n \log x$, prove that $y_{n+1} = \frac{n!}{x}$. **[6 Marks]**

(b) Using Taylor's theorem,

Prove that $\log \sin x = \log \sin a + (x-a)\cot a - \frac{1}{2}(x-a)^2 \operatorname{cosec}^2 x + \cdots$ **[6 Marks]**

Q.3 Solve any TWO:

(a) If $u = \log(x^3 + y^3 + z^3 - 3xyz)$, show that $\left(\frac{\partial}{\partial x} + \frac{\partial}{\partial y} + \frac{\partial}{\partial z}\right)^2 u = \frac{-9}{(x+y+z)^2}$. **[6 Marks]**

(b) If z is a homogeneous function of degree n in x and y , prove that

$x^2 \frac{\partial^2 z}{\partial x^2} + 2xy \frac{\partial^2 z}{\partial x \partial y} + y^2 \frac{\partial^2 z}{\partial y^2} = n(n-1)z$. **[6 Marks]**

(c) If $z = f(x, y)$ where $x = e^u + e^{-v}$ & $y = e^{-u} - e^v$,

then show that $\frac{\partial z}{\partial u} - \frac{\partial z}{\partial v} = x\frac{\partial z}{\partial x} - y\frac{\partial z}{\partial y}$. **[6 Marks]**

Q.4

(a) If $u = \frac{yz}{x}$, $v = \frac{zx}{y}$, $w = \frac{xy}{z}$, show that $\frac{\partial(u,v,w)}{\partial(x,y,z)} = 4$. **[4 Marks]**

(b) Find the percentage error in the measurement of the area of an ellipse when an error of **1.5 %** is made

in measuring its major and minor axes. [4 *Marks*]

(c) Find the points on the surface $z^2 = xy + 1$ nearest to the origin. [4 *Marks*]

Q.5 Solve any TWO:

(a) Evaluate the integral $I = \int_0^1 \int_0^x e^{x+y}\, dy\, dx$. [6 *Marks*]

(b) Change the order of integration and evaluate $\int_0^{\frac{\pi}{2}} \int_x^{\frac{\pi}{2}} \frac{cosy}{y}\, dx\, dy$. [6 *Marks*]

(c) Evaluate the integral $I = \int_0^a \int_0^x \int_0^{x+y} e^{x+y+z}\, dz\, dx\, dy$. [6 *Marks*]

Q.6

(a) State D' Alembert's ratio test, and hence check the convergence of the series:
$\sum_{n=1}^{\infty} \left(\frac{n^2}{2^n} + \frac{1}{n^2}\right)$. [6 *Marks*]

(b) State Cauchy's root test, and hence check the convergence of the series:
$\sum \frac{[(2n+1)\,x]^n}{n^{n+1}}$ $(x > 0)$. [6 *Marks*]

**********Paper End**********

DR. BABASAHEB AMBEDKAR TECHNOLOGICAL UNIVERSITY, LONERE

End Semester Winter Examination – Dec 2019

Course: B. Tech (All Courses) **Sem: I**

Subject Name: Engineering Mathematics-I **Subject Code: BTMA101**

Max Marks: 60M **Date:-11/12/2019** **Duration:- 3 Hrs.**

Instructions to the Students:

1. All questions are compulsory.
2. Use of non-programmable calculator is allowed.
3. Figures to right indicate full marks.
4. Illustrate your answer with neat sketches, diagram etc. whatever necessary.
5. If some part of parameter is noticed to be missing you may appropriately assume it and should mention it clearly.

		Marks
Q. 1	**Solve the following questions.**	
A)	Reduce to the Normal form and find the rank of the given matrix. $A=\begin{bmatrix} 1 & 2 & 3 & -1 \\ -1 & -1 & -3 & -1 \\ 1 & 0 & 1 & 1 \\ 0 & 1 & 1 & -1 \end{bmatrix}$	**4**
B)	Test the consistency and solve: $2x_1+x_2-x_3+3x_4=11$, $x_1-2x_2+x_3+x_4=8$, $4x_1+7x_2+2x_3-x_4=0$, $3x_1+5x_2+4x_3+4x_4=17$	**4**
C)	Find the eigen value & eigen vector for least positive eigen value of the matrix : $A=\begin{bmatrix} 4 & 2 & -2 \\ -5 & 3 & 2 \\ -2 & 4 & 1 \end{bmatrix}$	**4**
Q.2	**Solve any *three* of the following.**	
A)	If $x^x y^y z^z = c$ show that at point $x=y=z$, $\frac{\partial^2 z}{\partial x \partial y} = -[x \log ex]^{-1}$	**4**
B)	If $u=\sin\left(\frac{x}{y}\right)$ & $x=e^t$, $y=t^2$ verify $\frac{du}{dt}=\frac{\partial u}{\partial x}\frac{dx}{dt}+\frac{\partial u}{\partial y}\frac{du}{dt}$	**4**
C)	If $u=\sin^{-1}\left(\frac{x+y}{\sqrt{x}+\sqrt{y}}\right)$ then prove that $x^2\frac{\partial^2 u}{\partial x^2}+2xy\frac{\partial^2 u}{\partial x \partial y}+y^2\frac{\partial^2 u}{\partial y^2}=\frac{-\sin u \cos 2u}{4\cos^3 u}$	**4**
D)	If $u=f(2x-3y,3y-4z,4z-2x)$ prove that $\frac{1}{2}\frac{\partial u}{\partial x}+\frac{1}{3}\frac{\partial u}{\partial y}+\frac{1}{4}\frac{\partial u}{\partial z}=0$	**4**
Q. 3	**Solve any *three* of the following.**	
A)	Expand $f(x,y)=e^{x+y}$ in Maclaurin's theorem up to fourth term.	**4**
B)	If $x=u(1-v)$, $y=uv$ prove that $JJ'=1$	**4**
C)	A rectangular box open at the top is to have volume of 256 cubic feet, determine the dimensions of the box required least material for the construction of the box.	**4**
D)	Examine the function x^3+y^3-3axy for maxima & minima where $a>0$	**4**

Q.4	**Solve any *three* of the following.**	
A)	Evaluate $\int_0^{2a} x\sqrt{(2ax-x^2)}dx$	**4**
B)	Trace the Curve $y^2(a-x)=x^2(a+x)$	**4**
C)	Trace the Curve $x = a\cos^3 t$, $y = a\sin^3 t$	**4**
D)	Trace the Curve $r = a\cos 3\theta$	**4**
Q. 5	**Solve the following questions.**	
A)	Change the order of integration $I=\int_0^a \int_x^{a^2/x} f(x,y)dxdy$	**4**
B)	Change to polar and evaluate $\int_0^a \int_{\sqrt{ax-x^2}}^{\sqrt{a^2-x^2}} \frac{dxdy}{\sqrt{a^2-x^2-y^2}}$	**4**
C)	Find the volume bounded by the cylinders $x^2+y^2=ax \;\&\; z^2=ax$	**4**
	END	

DR. BABASAHEB AMBEDKAR TECHNOLOGICAL UNIVERSITY, LONERE

Supplementary Examination – Nov 2019

Brach: B. Tech. **Semester –I/II**
Subject: Engineering Physics (PHY103/PHY203) **Marks: 60**
Date: 13/12/2019 **Time:3 Hrs**

Instructions to the students:

1. All questions are compulsory and each question carries 10 marks
2. Illustrate your answers with neat sketches, diagrams etc. wherever necessary.
3. Necessary data is given in the respective questions. If such data is not given, it means that the knowledge of the part is part of examination.
4. If some part or parameter is noticed to be missing, you may appropriately assume it and should mention it clearly

---

Que. 1 **Attempt the following.** **(10)**

a) Obtain the differential equation of free oscillation and find its general solution. (8)

b) Calculate the fundamental frequency of quartz crystal 1 mm thick. (2)
Given: density of quartz is 2650 kg/m^3 and Young's modulus is 8 x 10^{10} N/m^2

Que. 2 **Attempt the following.** **(10)**

a) Discuss interference of light in thin film for reflected rays. (8)

b) A wedge shaped film is illuminated by light of wavelength 4650 Å. The angle of wedge is 40°. Calculate the fringe separation between two consecutive fringes. (2)

OR

Que. 2 **Attempt the following.** **(10)**

a) Explain the principle and working of Ruby Laser. (8)

b) Calculate the numerical aperture of an optical fibre whose core and cladding are made of materials of refractive indices 1.6 and 1.5 respectively. (2)

Que. 3 **Attempt the following.** **(10)**

C7B584B90A6F2F4613757AB6D139F258

a) Describe Millikan's oil drop method for determination of electronic charge. (8)

b) Find the lowest energy of a neutron confined to a nucleus of size 10^{-14} m. (2)

Que. 4 Attempt the following. **(10)**

a) Derive the relation between lattice constant and density of the cubic crystal. (8)

b) Lead has a FCC crystal structure with an atomic radius of 1.746 Å. Calculate the spacing between (200) and (220) planes. (2)

Que. 5 Attempt the following. **(10)**

a) What is Hysteresis Curve? Explain retentivity, coercivity. Explain B-H curve on the basis of domain theory. (8)

b) The magnetic susceptibility of a medium is 940 x 10^{-4}. Calculate its absolute and relative permeability. (2)

Que. 6 Attempt any two the following. **(10)**

a) Write Maxwell equations in differential and integral form and write its physical significance (5)

b) What is Hall effect? Derive an expression for Hall Coefficient and mobility of charge carriers. (5)

c) What is electric polarization? Explain with diagrams different types of polarizations in dielectric (5)

Paper End

	DR. BABASAHEB AMBEDKAR TECHNOLOGICAL UNIVERSITY, LONERE **End Semester Examination – Winter 2019** **Course: B. Tech** **Sem: I** **Subject: Engineering Physics (PHY1202)** **Marks:60M** **Date:13/12/2019** **Duration: 3 Hr.**		
	Instructions to the Students: *1. All the questions are compulsory.* *2. The level question/expected answer as per OBE or the Course Outcome (CO) on which the question is based is mentioned in ( ) in front of the question.* *3. Use of non-programmable scientific calculators is allowed.* *4. Assume suitable data wherever necessary and mention it clearly.*		
		(Level/CO)	Marks
Q. 1	**Solve Any Two of the following.**		
A)	What are forced oscillations? Obtain the differential equation of forced oscillations.	(Synthesis)	06
B)	Explain the production of ultrasonic waves using magnetostriction effect. Calculate the length of Ni rod needed to produce ultrasonic waves of frequency 40 KHz. Density of rod is 8.9 gm/cm^3 and Young's modulus of rod is 20.8 X 10^{10} N/m^2.	(Knowledge /Remember)	06
C)	Explain the effect of frequency and temperature on polarization in dielectric.	(Knowledge /Remember)	06
Q.2	**Solve Any Two of the following.**		
A)	Prove that in Newton's Rings by reflected light, the diameters of bright rings are proportional to square root of odd natural numbers.	(Evaluation)	06
B)	Explain the construction and working of Ruby laser with neat diagram.	(Comprehension/Understand)	06
C)	Define acceptance angle and numerical aperture. Refractive index of core is 1.48 and that of cladding is 1.47 in an optical fiber. Calculate critical angle, numerical aperture and acceptance angle.	(Analysis)	06
Q. 3	**Solve Any Two of the following.**		
A)	Explain the principle and working of Bainbridge Mass Spectrograph with neat diagram.	(Comprehension/Understand)	06

B)	What is uncertainty principle? Using this principle prove that electron cannot exist in the nucleus.	(Synthesis)	06
C)	Explain the construction and working of G.M. counter.	(Comprehension/ Understand)	06
Q.4	**Solve Any Two of the following.**		
A)	Show that shortest wavelength of continuous X-rays is inversely proportional to the potential difference applied.	(Synthesis)	06
B)	Derive the relation between lattice constant and density of the cubic crystal. Copper has FCC structure and its atomic radius is 1.278×10^{-10}m. Calculate density of Cu. Given atomic weight of Cu = 63.5.	(Application)	06
C)	Derive an expression for electromagnetic wave in free space and hence calculate the velocity of light in free space.	(Synthesis)	06
Q. 5	**Solve the following.**		
A)	Differentiate Type I and Type II superconductors.	(Application)	06
B)	What is Hall effect? Derive an expression for Hall voltage and Hall coefficient.	(Analysis)	06
	*****Paper End *****		

DR. BABASAHEB AMBEDKAR TECHNOLOGICAL UNIVERSITY,LONERE
Winter End Semester Examination – Dec 2019

Course: F.Y. B. Tech | **Sem: I**
Subject: Engineering Chemistry (CHM1202) | **Marks: 60**
Date: 16/12/2019 | **Duration: 3 Hr.**

Instructions to the Student:
1. All questions are compulsory.
2. Use of non-programmable scientific calculators is allowed.
3. Each question carries 12 marks.
4. Illustrate your answers with neat sketches, Diagram etc. Whenever necessary.

		(Level / CO)	Marks
Q.1	Solve **Any Two** of the following.		
	A) Explain in detail Hot Lime-soda process with its advantages and disadvantages.	01	06
	B) Explain the determination of Dissolved Oxygen by Winkler's Method.	01	06
	C) Define Hard and Soft water. How does the hardness of water determined by EDTA complexometric method?	01	06
Q.2	Solve **Any Two** of the following.		
	A) What is Phase Rule? Explain the term Component and Degree's of Freedom with suitable examples.	02	06
	B) Explain in detail Phase Diagram of Water system.	02	06
	C) Describe Phase Diagram of two component Ag-Pb alloy system.	02	06
Q.3	Solve **Any One** of the following.		
	A) i) Explain electrolytic refining of metal.	03	06
	ii) Discuss the process of Calcination and Roasting of ore.	03	06
	B) Explain Froth-Flotation, Magnetic separation and Gravity separation methods of concentration of ore.	03	12
Q.4	Solve **Any Two** of the following.		
	A) Discuss the Physical properties of Lubricant.	04	06
	B) Describe the process of determination of % of Carbon, Hydrogen and Sulphur in the coal.	04	06
	C) Explain in detail the process of Refining of Petroleum.	04	06
Q.5	Solve **Any One** of the following.		
	A) i) Write a note on Conductometric titrations.	05	06
	ii)Write a note on glass electrode.	05	06
	B) Explain in detail Qstwald's and Quinonoid Theory of acid base indicators.	05	12

Paper End

DR. BABASAHEB AMBEDKAR TECHNOLOGICAL UNIVERSITY, LONERE – RAIGAD -402 103

Winter Semester Examination – December - 2019

Branch: B. Tech. Automobile **Sem.:- I**
Subject:-Energy & Environment Engineering (CHE 106/CHE206) **Marks: 60**
Date:- 18/12/2019 **Time:- 3 Hr.**

Instructions to the Students

1.Solve Any Five of the following.
2.Each question carries 12 marks.
3. Illustrate your answers with neat sketches, diagram etc., wherever necessary.
4. If some part or parameter is noticed to be missing, you may appropriately Assume it and should mention it clearly

(Marks)

Q.N.	Question	Marks	CO	BT
1 a	Explain the process of nuclear fission with a neat sketch. What are the main components of nuclear power plants? Discuss the functioning of the plant with a suitable schematic.	6	EEE1205-2	BT2
1 b	What are the fossil fuels used for generation of conventional power? Compare the Hydroelectric plants with the diesel power plant in respect of site requirement, initial cost, and fuel transportation, reliability, operating cost, simplicity and cleanliness.	6	EEE1205-1/3	BT1 BT2
2a	How the Wind mills are classified? Sketch the diagram of a HAWT, and explain the function of its main components.	6	EEE1205-2	BT2
2b	List the types of fuel cells. What are the main components of fuel cell? List some applications of fuel cells. Write the reaction taking place at the anode and cathode of a fuel cell.	6	EEE1205-2	BT1 BT2
3a	What is energy conservation? How do you conserve the energy in transportation on road? Write the suitable measures.	6	EEE1205-1	BT1
3 b	What is the role of Energy manager in industry? Explain the concept of star rating of appliances in connection with	6	EEE1205-1	BT1 BT2

	energy conservation.			
4a	What is particulate matter? What are the control measures to be taken to minimize the air pollution in respect of particulate matter? Write any three examples of natural air pollution.	6	EEE1205-1	BT2
4b	What are the health consequences of air pollution? What are the most polluted cities in the world? Discuss about "sick building syndrome"?	6	EEE1205-4	BT1 BT2
5a	Give a broad classification of water pollutants. Explain the terms BOD and COD in connection with water pollution. Describe how these terms are different with one another.	6	EEE1205-4	BT2
5b	What is noise pollution? Explain the causes and effects of noise pollution on human health	6	EEE1205-4	BT1 BT2
6	Solve any **Four** of the following			
a	Explain with a neat sketch the working of coal based power plant.	3	EEE1205-2	BT2
b	Explain in brief any two applications of wind energy requiring mechanical power.	3	EEE1205-2	BT2
c	What is the difference between primary and secondary air pollutants? What are some examples of each? Explain.	3	EEE1205-4	BT1
d	What are the main causes of water pollution? How can water pollution be controlled?	3	EEE1205-4	BT1
e	Define the term soil pollution. Explain in brief the sources of soil pollution.	3	EEE1205-4	BT1 BT2
f	Discuss the basic principle of operation of Magneto-Hydro dynamic Generator. Draw a simple sketch.	3	EEE1205-2	BT2

Paper End

DR. BABASAHEB AMBEDKAR TECHNOLOGICAL UNIVERSITY, LONERE – RAIGAD -402 103

Winter Semester Examination – December - 2019

Branch: B. Tech. (Engineering &Technology) **Sem.:- I**
Subject:-Energy & Environment Engineering (EEE1205) **Marks: 60**
Date:- 18/12/2019 **Time:- 3 Hr.**

Instructions to the Students

1. Solve Any Five of the following.
2. Each question carries 12 marks.
3. Illustrate your answers with neat sketches, diagram etc., wherever necessary.
4. If some part or parameter is noticed to be missing, you may appropriately Assume it and should mention it clearly

(Marks)

Q.N.	Question	Marks	CO	BT
1 a	Enumerate the various systems and components used in steam power plant. Explain feed water and ash handling circuit in these power plants.	6	EEE1205-2	BT2
1 b	What is a nuclear chain reaction? Explain how electricity is generated from a nuclear reactor?	6	EEE1205-1/3	BT1 BT2
2a	What is Bio-mass? Write the percentage composition of Bio-gas. What are the environmental and health benefits of Bio-gas utilization?	6	EEE1205-2	BT2
2b	How the Wind mills are classified? Sketch the diagram of a HAWT, and explain the function of its main components.	6	EEE1205-2	BT1 BT2
3a	What is energy efficiency? How do you conserve the energy in industry? Write the suitable measures.	6	EEE1205-1	BT1
3 b	What is the role of Energy manager in industry? Explain the concept of star rating of appliances in connection with energy conservation.	6	EEE1205-1	BT1 BT2
4a	What are the major sources of outdoor pollution? What effects does air pollution have on Health of animals and plants and materials.	6	EEE1205-1	BT2
4b	What are the major indoor pollutants?	6	EEE1205-4	BT1

	Where do the following indoor pollutants come from? How can you prevent or control indoor pollutants?			BT2
5a	Give a broad classification of water pollutants. What is the significance of BOD and COD?	6	EEE1205-4	BT2
5b	What is noise pollution? How to control it? What are its effects?	6	EEE1205-4	BT1 BT2
6	Solve any **Four** of the following			
a	Give classification of hydroelectric power plants and brief about the concept of mini and hydel power plants.	3	EEE1205-2	BT2
b	List at least four positive and negative effects each for the OTEC System.	3	EEE1205-2	BT2
c	What is marble cancer? How is Taj Mahal turning yellow?	3	EEE1205-4	BT1
d	How oil spills and sediments degrade the water quality? Explain.	3	EEE1205-4	BT1
e	Define solar energy. What are the applications of solar energy?	3	EEE1205-4	BT1 BT2
f	What is radioactive pollution? What are its effects?	3	EEE1205-2	BT2

Paper End

DR. BABASAHEB AMBEDKAR TECHNOLOGICAL UNIVERSITY, LONERE

Winter End Semester Examination – Dec 2019

Course: B. Tech. Sem: I B

Subject Name: Engineering Mechanics EM1203 Max Marks: 60

Date: 20/12/2019 Duration: 3 Hrs.

Instructions to the Students:

1. *All 05 questions are compulsory, however there may be internal choice for few questions.*
2. *Use of non-programmable scientific calculators is allowed.*
3. *Assume suitable data wherever necessary and mention it clearly.*

Marks

Q. 1 A) Define the following: Statics, Dynamics, Equilibrant, Lami's theorem. (4)

Or

A) Two unlike parallel forces of magnitude 400 N and 100 N are acting in such a way that their lines of action are 150 mm apart as shown in figure. Determine the magnitude of the resultant force and the point at which it acts. (4)

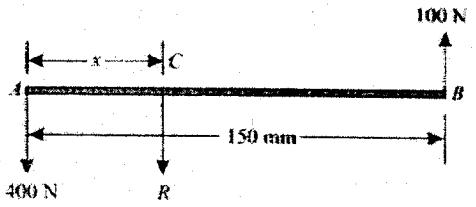

B) Find the magnitude and direction of the resultant force for the number of forces acting at a common point as shown in figure. (8)

The forces 20 N, 30 N, 40 N, 50 N and 60 N are acting at one of the angular points of a regular hexagon, towards the other five angular points, taken in order.

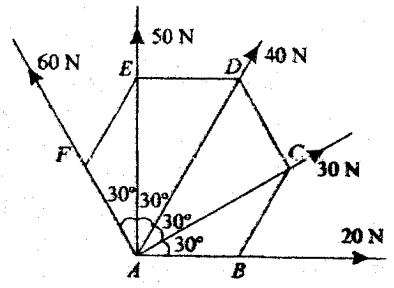

Q. 2 Answer any two from the following:

A) What is meant by friction? Mention the laws of static friction. (6)

B) Determine the coordinates x_c and y_c of a plane lamina as shown in figure. A circular portion of diameter 150 mm is cut symmetrically about y direction through a rectangular plate of size 200 mm x 300 mm. (6)

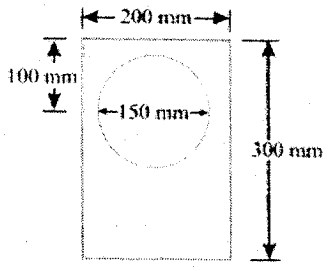

C) Determine the forces in all the members of a truss shown in figure and tabulate the results in magnitude and direction. Support A is hinge while support E is roller. (6)

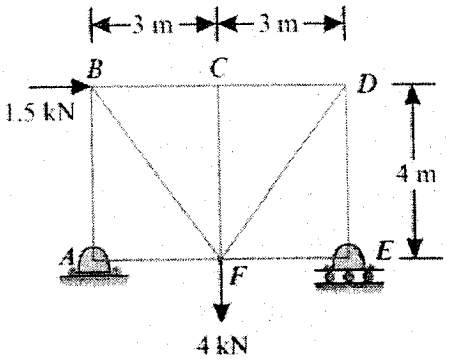

Q. 3 A) A wheel increases its speed from 45 r.p.m. to 90 r.p.m. in 30 seconds. Find (i) angular acceleration of the wheel, and (ii) no. of revolutions made by the wheel in these 30 seconds. (6)

B) A particle is projected inside a horizontal tunnel with a velocity of 60 m/s. The height of tunnel is 5 metres. Find the angle of projection and the greatest possible range. (6)

Q. 4 A) A vehicle, of mass 500 kg, is moving with a velocity of 25 m/s. A force of 200 N acts on it for 2 minutes. Find the velocity of the vehicle : (6)

(i) when the force acts in the direction of motion, and

(ii) when the force acts in the opposite direction of the motion.

B) At a certain instant, a body of mass 10 kg, falling freely under the force of gravity, was found to be falling at the rate of 20 m/s. What force will stop the body in (i) 2 seconds, and (ii) 2 metres? (6)

Q. 5 A) State with mathematical equation: i) Law of conservation of momentum, ii) Newton's law of collision of elastic bodies. (8)

Or

A) State and prove the law of conservation of energy. (8)

B) A railway engine of mass 20 tonnes is moving on a level track with a constant speed of 45 km.p.h. Find the power of the engine, if the frictional resistance is 80 N/t. Take, efficiency of the engine as 80 %. (4)

********** **End of Paper**********

DR. BABASAHEB AMBEDKAR TECHNOLOGICAL UNIVERSITY, LONERE – RAIGAD – 402 103

Winter Semester Examination – December – 2019

Branch: B. Tech. (Group A / Group B) | **Semester: I/II**
Subject with Subject Code: Engineering Mechanics (ME102/ME202) | **Marks: 60**
Date: 20 / 12 / 2019 | **Time: 3 Hrs.**

Instructions: 1] Attempt any **5 Questions**. Each Question Carry **12 Marks**.
2] Figures to the right indicate full marks.
3] Assume suitable data, if necessary. Neat diagrams must be drawn wherever necessary.

Q. No. 1 Solve any two:

A) Define: Rigid body, Statics, and Line of action of force. **(6)**

B) An eyebolt is subjected to four forces as shown in figure. F_1=12 kN, F_2 = 8 kN, F_3= 18 kN, F_4=4 kN that act at angles of α_1 = 45°, α_1 = 45°, α_2 = 100°, α_3 = 205°, α_4 = 270°. Determine the magnitude and direction of the resultant force **(6)**

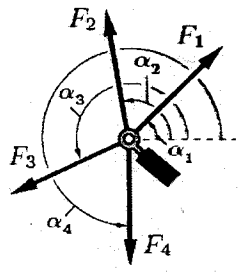

C) State: Parallelogram law of forces. **(6)**

Solve: Two persons are pushing a box so that the net force on the box is 12 N to the east. If one of the person is applying a force 5 N to the north, what is the force applied by the other person.

Q. No. 2 A) Find the support reactions for a simply supported beam shown in figure. **(6)**

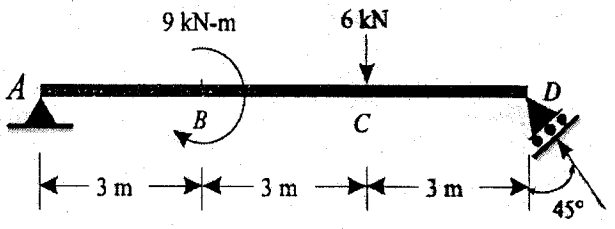

B) Determine the forces in the various members of a pin-joined frame as shown in figure. Tabulate the result stating whether they are in tension or compression. **(6)**

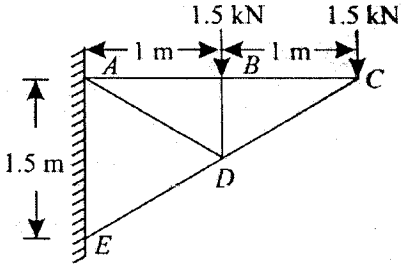

Q. No. 3 **A)** Determine the coordinates x_c and y_c of a plane lamina as shown in figure. **(6)**

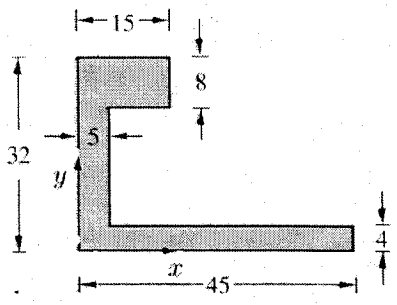

B) A block of weight 500 N is lying on a rough plane inclined at an angle of 25° with the horizontal. It is supported by a pull (P) parallel to the plane as shown in figure. The angle of friction is 20°. Determine the minimum and maximum values of P, for which the equilibrium can exist. **(6)**

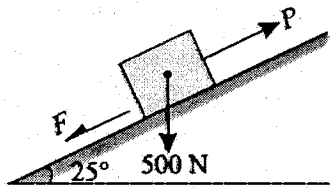

Q. No. 4 **A)** A ball is projected upwards with a velocity of 60 m/s and reaches a maximum height of 5 metres above ground level. Determine the angle of projection and point where it hits the ground. **(6)**

B) A wheel increases its speed from 45 r.p.m. to 90 r.p.m. in 30 seconds. Find (a) angular acceleration of the wheel, and (b) no. of revolutions made by the wheel in these 30 seconds. **(6)**

Q. No. 5 **A)** At a certain instant, a body of mass 10 kg, falling freely under the force of gravity, was found to be falling at the rate of 20 m/s. What force will stop the body in (i) 2 seconds and (ii) 2 metres? **(6)**

B) State and explain in brief D'Alembert's principle. **(6)**

Q. No. 6 **A)** A railway engine of mass 20 tonnes is moving on a level track with a constant speed of 45 km.p.h. Find the power of the engine, if the frictional resistance is 80 N/t. Take, efficiency of the engine as 80 %. **(4)**

B) What is meant by Newton's law of collision of elastic bodies? Write its mathematical expression. **(4)**

C) State: The work-energy principle for a system of particles. **(4)**

----- END OF PAPER -----

	DR. BABASAHEB AMBEDKAR TECHNOLOGICAL UNIVERSITY, LONERE **Winter End Semester Examination – Dec. 2019** **Course: B. Tech.** **Sem: I** **Subject: Communication Skills** **Subject Code: CS1204** **Max Marks: 60** **Date:21/12/2019** **Duration: 3 Hr.**		
	Instructions to the Students: 1. Each question carries 12 marks. 2. Attempt **any five** questions of the following. 3. Illustrate your answers with neat sketches, diagram etc., wherever necessary.		
		(Level/CO)	Marks
Q. 1			
A)	**Write answers of any two of the following:**		**12**
1.	Define communication and its process?	**Knowledge**	03
2.	What functions do engineers perform through communication?	**Application**	03
B)	**Discuss any four barriers to communication and validate your answer with one example each.**	**Comprehension**	06
Q.2			
A)	**Write short note on any two of the following:**		**12**
1.	Non-verbal communication during Interviews	**Application**	03
2.	Tips to overcome fear of Public Speaking/ Stage fright?	**Application**	03
B)	**What are the principles of group discussion?**	**Knowledge**	06
Q. 3			**12**
A)	**Draw a diagram of Speech organs. Explain any three speech organs with examples.**	**Comprehension**	06
B)	Write the spelling for the following transcription. (2 marks each) 1. dɪsˈʧɑːʤ 2. ˈɪndəstri 3. ˈθɪətə	**Comprehension**	2x3= 06
Q.4			**12**
A)	**Fill in the blanks with appropriate words. (One mark each)** Rahul and Smita _____ (work, works, worked) in a mall everyday till 6:00 pm. Rahul handles the billing section of _____ (a, an, the, no article) mall, while Smita takes care of logistics. Yesterday, Smita _____ (see, saw, was seeing) a mouse running _____ (in, into, on) the storeroom. Rahul also heard some noise near _____ (a, an, the, no article) boxes. He _____ (started, start, has started) observing the movement.	**Application**	1x6= 06
B)	**Fill in the blanks with appropriate modal auxiliary verbs.**	**Application**	1x3= 03

	(one mark each) 1. My grandmother is eighty-five, but she ..... still read and write without glasses. (can, may, could) 2. You ..... not lose any more weight. You are already slim. (may, need, should) 3. We ..... follow traffic rules to avoid accidents. (may, can, must)		
C)	**Fill in the blanks with the word opposite in meaning to those underlined. (one mark each)** 1. What looks like a **convenient** shortcut may prove to be very _____ in the long run. 2. No one wants to listen to an **ignorant** man but everybody listens to a _____ man. 3. Gold is an **expensive** metal while iron is _____.	**Application**	1x3= 03
Q. 5	**Solve Any One of the following.** *(This is just a sample instruction)*		**12**
A)	Write an application letter to your Head of the Department requesting 3 days' leave for your sister's marriage ceremony.	**Synthesis**	06
B)	Being a General Secretary of your institute, write an email to Hon. Narayan Murthy, Founder, Infosys inviting him as the Chief Guest for your College Annual function.	**Synthesis**	06
Q. 6	Solve any **three** of the following.		**(3x4)= 12**
A)	What are the barriers to listening?	**Knowledge**	4
B)	What is extempore Speech?	**Knowledge**	4
C)	How phonetics is important for Engineers?	**Comprehension**	4
D)	List down the points to be included in resume.	**Knowledge**	4
	_____ **Paper End** _____		

Dr. Babasaheb Ambedkar Technological University, Lonere-Raigad

Winter Semester Examination December-2019

Class: B.Tech. First Year

Subject: Communication Skills (HS102/HS202)

Time: 03 hours **Max. Marks:** 60

Date: 21/12/2019 **Semester:** I/II

Instructions:

1) Each question carries 12 marks.
2) Attempt any Five questions.

Q.1 a) What are the major objectives of communication? Explain in brief. (06)

b) Write short notes on: (06)

i) Need for Effective Communication ii) Verbal Communication

Q.2 a) Assume that you are an Economic expert from India. You are presenting your views about the Indian economy versus the global economy. Present your views about the same in front of a press reporter who is interviewing you. (06)

b) What is the importance of non-verbal communication while delivering a talk? Explain. (06)

Q.3 a) Transcribe the following words using phonemic script: (06)

i) pocket ii) miniature iii) complement

iv) illuminate iv) eliminate v) lite

b) Spell the following words reading the phonemic transcriptions:

i) /pɑ:rti/ ii) /ka:t/ iii)/sImbl/ (06)

Q.4 a) Rewrite the following sentences using appropriate prepositions: (06)

i) The visitors should be kept away ..... the patients in order .... keep the patient safe ..... any infection.

ii) The employees were awarded ..... their performance during the year.

iii) The lady was accused ..... the crime she had not committed.

iv) My uncle was looking ..... the golden ring in the garden.

b) Rewrite the following sentences using appropriate articles wherever required (06)

i) I was felicitated by ..... Principal of our school for getting ..... first rank in the class.

ii) My sister gifted me ..... new ink pen for my achievement in ..... Painting competition in ..... town.

iii) My friend showed me ..... new bike.

Q.5 Write a job application for the post of R & D Engineer at Parag Milk Products India Ltd., Shivaji Nagar Nashik. Address the application to the Personnel Manager of the organization. Include your bio-data with the application. (12)

Q.6 a) What are the guidelines of effective speaking? Discuss. (06)

b) Write short notes on: (06)

i) Skimming & Scanning ii) Importance of Eye contact

****

DR. BABASAHEB AMBEDKAR TECHNOLOGICAL UNIVERSITY, LONERE - RAIGAD -402 103
Winter Semester Examination - Dec. - 2019

Branch: B. Computer Engineering **Sem.:-I**
Subject:- Computer Programming in C [CP1204] **Marks: 60**
Date:- 23/12/2019 **Time:- 3 Hr.**

==========

Instructions to the Students

1. Each question carries 12 marks.
2. Attempt **any five** questions of the following.
3. Illustrate your answers with neat sketches, diagram etc., wherever necessary.
4. If some part or parameter is noticed to be missing, you may appropriately assume it and should mention it clearly

---

(Marks)

Q.1. Attempt any two (12)

a) What is algorithm? Write down its characteristics.

b) What are the different symbols, its purpose and give its description with which is used for different states in flow chart?

c) Explain language translators in details. Differentiate between compiler and interpreter.

Q.2. Solve the following (12)

a) Define variable. With suitable example explain variable declaration. Explain the rules for constructing variable names.

b) The length & breadth of a rectangle and radius of a circle are input through the keyboard. Write a program to calculate the area & perimeter of the rectangle, and the area & circumference of the circle.

Q.3. Attempt any two of following (12)

a) Write a program to print Fibonacci series up to the term entered by the user.

b) What is switch statement? Explain its syntax. What is the use of break statement?

c) What is function prototype? Write a program to find sum of 4 digits by using function.

Q.4 Solve the following (12)

a) What is array? Write syntax of one-dimensional array. Write a program to read and print a matrix of 3X3.

b) What are the types of string manipulation functions in C? Write a program by using any three string manipulation functions.

Q.5. Solve the following (12)

a) Write a program in C by using structure to store information of student i.e. name, roll number and marks. And also display it.

b) Define structure. How to create structure? How to initialize structure? How to declare structure variable?

Q.6. Solve any **three** of the following (3x4=12)

a) Explain programming process in detail.

b) Explain relational and logical operators

c) Define function. How to pass values into function?

d) Write a short note on multidimensional array.

e) Explain array of structure

Paper End

DR. BABASAHEB AMBEDKAR TECHNOLOGICAL UNIVERSITY, LONERE – RAIGAD -402 103

Winter Semester Examination – Dec. - 2019

Branch:- B Tech Computer Engineering **Sem.:- I**

Subject:-Basic Computer Programming (ICT106/ICT206) **Marks: 60**

Date: - 23/12/2019 **Time:- 3 Hr.**

Instructions to the Students:

1. *Each question carries 12 marks.*
2. *Attempt **any five** questions of the following.*
3. *Illustrate your answers with neat sketches, diagram etc., wherever necessary.*
4. *If some part or parameter is noticed to be missing, you may appropriately assume it and should mention it clearly*

(Marks)

Q.No.1 a) **Explain Error checking and Debugging of program.** **(06)**

b) **Explain in detail Arithmetic, Relational and Logical operators in C.** **(06)**

Q.No.2 **Attempt any two of the following:** **(12)**

a) **Why Compiling is important in C programming? How to compile Program?**

b) **What is Conditional Expressions? How it is used in C?**

c) **Write short note on both.**

- **i) Flowchart**
- **ii) Data Types in C**

Q.No.3 a) **Write difference between While loop, Do While loop and For loop.** **(06)**

b) **Suppose new generation of transport Bus (root Mumbai to Kolhapur) has no conductor in it, and there is machine at the door of bus has functionality for ticket booking, in that there are four options which indicates Stops of journey like 1-Panvel, 2 -Pune, 3-Satara, 4-Kolhapur. Passenger have to enter appropriate choice, if no option chosen then it will consider Kolhapur as default and book Ticket Accordingly. Write a program to develop such functionality.** **(06)**

Q.No.4 a) **Define following terms with proper example.** **(06)**

i) Static Variables **ii) Register Variables** **iii) Function**

Q.No.4 b) **What will be the output if you will compile and execute the following code? Choose correct option from given bellow and justify your answer.** **(06)**

i)
```
void main(){
int i=10;
static int x=i;
if(x==i)
        printf("Equal");
else if(x>i)
        printf("Greater than");
else
        printf("Less than");
}
```

(A) Equal (B) Greater than (C) Less than (D) Compiler error (E) None of above

ii)
```
void start();
void end();
#pragma startup start
#pragma exit end
int static i;
void main(){
                printf("\nmain function: %d",++i);
        }
void start(){
                clrscr();
                printf("\nstart function: %d",++i);
        }
void end(){
                printf("\nend function: %d",++i);
                getch();
        }
```

(A) main function: 2
start function: 1
end function: 3

(B) start function: 1
main function: 2
end function: 3

(C) main function: 2
end function: 3
start function: 1

(D) Compiler error

(E) None of these

Q.No.5 a) Why do we use Arrays in C? What is Multidimensional Array? **(06)**

b) What is Command Line Argument? How to use command line argument explain with any program. **(06)**

Q.No.6 Attempt any two of the following: **(12)**

a) What is structures? How to create structures? How to declare structure variable? How to initialize structure members? What is an array of structure?

b) What happen if Standard Library is not present in C? Explain any Two Headers in Standard Library.

c) Write a program to identify, number entered by user is EVEN or ODD.

--PAPER END--

(18)

DR. BABASAHEB AMBEDKAR TECHNOLOGICAL UNIVERSITY,

LONERE – RAIGAD -402 103

Winter End Semester Examination – Dec.– 2019

Branch: B. Tech Computer Engineering (Group B) **Sem.: - II**
Subject: -Engineering Graphics ME104/ME204 **Marks:60**
Date: -24/12/2019 **Time: -4 Hr.**

==========

Instructions to the Students

1. Each question carries 12 marks.
2. Attempt any five questions of the following.
3. Illustrate your answers with neat sketches, diagram etc., wherever necessary.
4. If some part or parameter is noticed to be missing, you may appropriately assume it and should mention it clearly.
5. Retain all construction lines.

(Marks)

Q.1. **a.)**Inscribe a regular Heptagon in a circle of diameter 80mm. **(6)**

b.) Inscribe a Square in a circle of diameter of 70mm,Square is resting on one of its corner on ground **(6)**

Q.2 Draw Front View in the Direction of X and Right-Hand Side view of the given objectin fig Orthographic Projections. **(12)**

Q.3. Draw the Front View & Top View of line "AB", if HT & VT of line is 20& 35 mm below XY and distance between them is 30mm. Point "A" is 20mm above HPand length of Front View of AB is 60mm. **(12)**

Q.4. Draw the projections of Pentagonal pyramidside of base 25mm& height of axis 70mm if it is resting on one of its base edge such that axis is inclined at 30degrees to HP & the edge on which it is resting is inclined at 45 degrees to VP (Apex is away from the observer)

(12)

Q.5.A .Draw isometric drawing of given object in fig. Isometric Drawing **(12)**

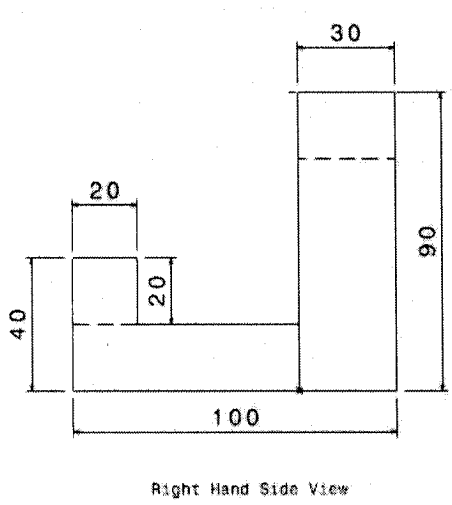

OR

B) A right circular cone of diameter 60mm & height of Axis 70mm is resting on ground on its base. A Cutting Plane perpendicular to HP & inclined at 45 degrees to V. P. cuts the cone by passing through a point at a distance of 10 mm from axis, draw the projections and true shape of the section. **(12)**

Q.6. Draw the Development of cone given in the fig. Development of Cone **(12)**

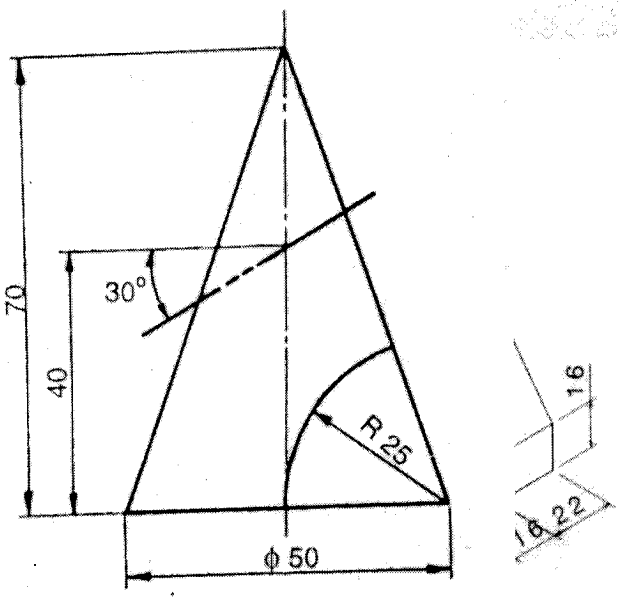

Development of Cone

Fig. Orthographic Projection

DR. BABASAHEB AMBEDKAR TECHNOLOGICAL UNIVERSITY, LONERE – RAIGAD -402 103

Winter Semester Examination – Dec. 2019

Course: B. Tech (All) **Semester:** I
Subject: Engineering Graphics (EG1203)
Date: 24/12/2019 **Marks:** 60 **Time:** 4 Hrs.

==========

Instructions to the Students

1. Each question carries 12 marks.
2. Attempt **any five** questions out of the following six questions.
3. Illustrate your answers with neat sketches, diagram etc., wherever necessary.
4. If some part or parameter or dimension is noticed to be missing, you may appropriately assume it and should mention it clearly

---

(Marks)

Q.1 **a)** Draw the following sentence according to drawing standard SP 46 (or any other standard convention). **(6)**

INDIA, that is BHARAT, shall be a Union of States.

b) Draw a regular pentagon of 30 mm side by any method and draw also a circle touching each corner of the pentagon. **(6)**

Q.2 Draw the following views of the object (in X – direction) shown below, by using first angle projection method.

a) Front View (6) **b) Top View (6)**

7BBFC32DFBECA84684A34C3EE535703E

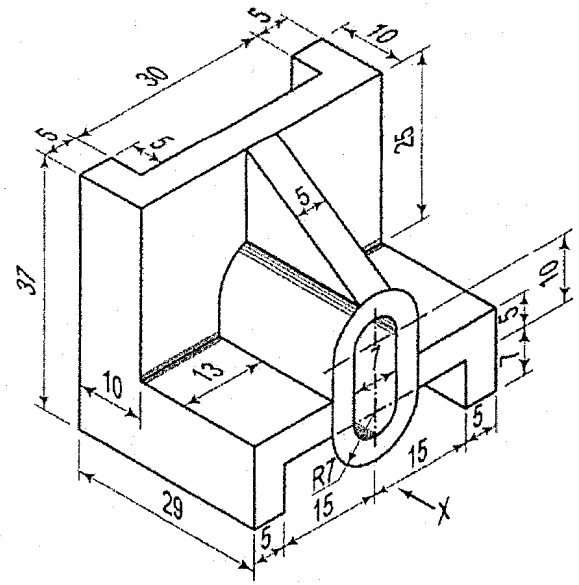

Q.3. Draw the projections of a regular hexagon of 30 mm side, which is resting on a corner in the H.P., with its surface making an angle of 30° with the H.P. The TV of the diagonal passing through that corner is inclined at 60° to the V.P. **(12)**

OR

A line CD, 90 mm long, measures 72 mm in FV and 65 mm in TV. Draw the two views of the line if it fully lies in the first quadrant. Find the true inclinations of the line. Assume point C at suitable distances from the RPs. **(12)**

Q.4 A triangular prism with side of base 40 mm and length of axis 70 mm has its edge of base in the V. P. and inclined at 60^0 to the H. P. The rectangular face containing that edge makes 30^0 with the V.P. Draw the projections of the prism. **(12)**

Q.5. A horizontal cylinder (axis parallel to the VP) with a 60 mm diameter and 100 mm length is cut by an auxiliary incline plane (AIP) such that the true shape of the section is an ellipse of major axis 90 mm. Draw its front view, side view and locate the cutting plane. Also, draw the true shapes of the section. **(12)**

Q.6. Draw the isometric view of the following object having FV and TV drawn by **third angle projection** method. **(12)**

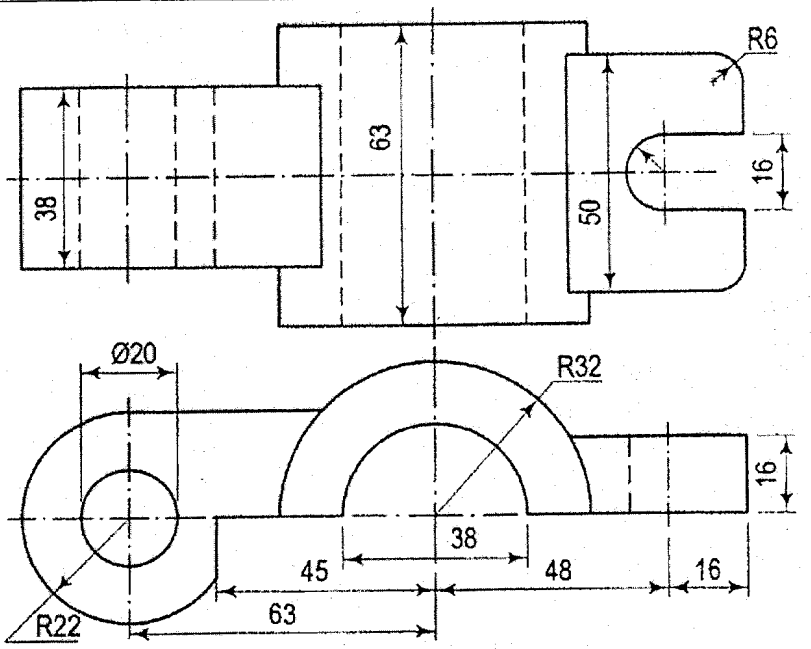

7BBFC32DFBECA84684A34C3EE535703E

DR. BABASAHEB AMBEDKAR TECHNOLOGICAL UNIVERSITY, LONERE – RAIGAD -402 103

Semester Winter Examination – Dec.- 2019

Branch: B. Tech. (Common to all) | **Semester:- I**
Subject:- Engineering Mathematics – I (MATH 101) | **Marks: 60**
Date:- 11/12/2019 | **Time:- 3 Hr.**

Instructions to the Students

1. Attempt **any five** questions of the following.
2. Illustrate your answers with neat sketches, diagram etc., wherever necessary.
3. If some part or parameter is noticed to be missing, you may appropriately assume it and should mention it clearly

---

Q.1

(a) Determine the consistency of the set of equations:

$x - 2y + z = -5$; $x + 5y - 7z = 2$; $3x + y - 5z = 1$. **[6 Marks]**

(b) Find the eigen values and eigen vectors of the matrix $A = \begin{bmatrix} 3 & 1 & 4 \\ 0 & 2 & 6 \\ 0 & 0 & 5 \end{bmatrix}$. **[6 Marks]**

Q.2

(a) If $y = x^n \log x$, prove that $y_{n+1} = \frac{n!}{x}$. **[6 Marks]**

(b) Using Taylor's theorem,

Prove that $\log \sin x = \log \sin a + (x-a)\cot a - \frac{1}{2}(x-a)^2 \operatorname{cosec}^2 x + \cdots$ **[6 Marks]**

Q.3 Solve any TWO:

(a) If $u = \log(x^3 + y^3 + z^3 - 3xyz)$, show that $\left(\frac{\partial}{\partial x} + \frac{\partial}{\partial y} + \frac{\partial}{\partial z}\right)^2 u = \frac{-9}{(x+y+z)^2}$. **[6 Marks]**

(b) If z is a homogeneous function of degree n in x and y , prove that

$x^2 \frac{\partial^2 z}{\partial x^2} + 2xy \frac{\partial^2 z}{\partial x \partial y} + y^2 \frac{\partial^2 z}{\partial y^2} = n(n-1)z$. **[6 Marks]**

(c) If $z = f(x, y)$ where $x = e^u + e^{-v}$ & $y = e^{-u} - e^v$,
then show that $\frac{\partial z}{\partial u} - \frac{\partial z}{\partial v} = x\frac{\partial z}{\partial x} - y\frac{\partial z}{\partial y}$. **[6 Marks]**

Q.4

(a) If $u = \frac{yz}{x}$, $v = \frac{zx}{y}$, $w = \frac{xy}{z}$, show that $\frac{\partial(u,v,w)}{\partial(x,y,z)} = 4$. **[4 Marks]**

(b) Find the percentage error in the measurement of the area of an ellipse when an error of **1.5 %** is made

in measuring its major and minor axes. [4 *Marks*]

(c) Find the points on the surface $z^2 = xy + 1$ nearest to the origin. [4 *Marks*]

Q.5 Solve any TWO:

(a) Evaluate the integral $I = \int_0^1 \int_0^x e^{x+y}\, dy\, dx$. [6 *Marks*]

(b) Change the order of integration and evaluate $\int_0^{\frac{\pi}{2}} \int_x^{\frac{\pi}{2}} \frac{cosy}{y}\, dx\, dy$. [6 *Marks*]

(c) Evaluate the integral $I = \int_0^a \int_0^x \int_0^{x+y} e^{x+y+z}\, dz\, dx\, dy$. [6 *Marks*]

Q.6

(a) State D' Alembert's ratio test, and hence check the convergence of the series:
$\sum_{n=1}^{\infty} \left(\frac{n^2}{2^n} + \frac{1}{n^2}\right)$. [6 *Marks*]

(b) State Cauchy's root test, and hence check the convergence of the series:
$\sum \frac{[(2n+1)\,x]^n}{n^{n+1}}$ $(x > 0)$. [6 *Marks*]

******************************Paper End********************************

DR. BABASAHEB AMBEDKAR TECHNOLOGICAL UNIVERSITY,LONERE
Winter End Semester Examination –Dec 2019

Course: F.Y.B. Tech | **Sem: I**
Subject: Engineering Chemistry (CHM103/CHM203) | **Marks: 60**
Date: 16/12/2019 | **Duration: 3 Hr.**

Instructions to the Student:

1 Each question carries 12 marks.
2 Attempt any FIVE questions of the following.
3 Illustrate your answers with neat sketches, Diagram etc. Whenever necessary.

		(Level / CO)	Marks
Q.1	Solve **Any Two** questions of the following.		
	A) Explain Zeolite process of softening of water with its advantages and disadvantages	01	06
	B) Write a note on Biological Oxygen Demand (BOD).	01	06
	C) How does the hardness of water determined by using EDTA method.	01	06
Q.2	Attempt the following questions.		
	A) Explain in detail Phase diagram of Water system	02	06
	B) State Phase Rule equation. Explain the term Phase and Component with suitable examples.	02	06
Q.3	Attempt the following questions.		
	A) Explain the Froth-Flotation & Magnetic separation method for concentration of ore.	03	06
	B) Explain the reduction of ore by Smelting process	03	06
Q.4	Solve **Any Two** questions of the following.		
	A) Explain Proximate Analysis of Coal.	04	06
	B) Give the classification of fuel and explain characteristics of a good fuel.	04	06
	C) Discuss the type of Lubrication with examples.	04	06
Q.5	Attempt the following questions.		
	A) Explain Synthesis, Physical, Chemical properties and uses of Pyridine.	05	06
	B) How does ethyl alcohol manufacture from molasses by fermentation Process	05	06
Q.6	Solve **Any Two** questions of the following.		
	A) Write a note on : Conductometric titrations	06	06
	B) Explain Ostwald's theory of acid base indicators.	06	06
	C) Write a note on: Glass electrode.	06	06

Paper End

DR. BABASAHEB AMBEDKAR TECHNOLOGICAL UNIVERSITY,
LONERE – RAIGAD -402 103
Semester Winter Examination – December - 2019

Branch: B. Tech. (Common to all) **Semester:- II**

Subject with Subject Code:- Engineering Mathematics – II (MATH 201) **Marks: 60**

Date:- 09/12/2019 **Time:- 3 Hr.**

Instructions to the Students

1. Attempt **any five** questions of the following.
2. Illustrate your answers with neat sketches, diagram etc., wherever necessary.
3. If some part or parameter is noticed to be missing, you may appropriately assume it and should mention it clearly

Q.1

(a) Find all the values of $(i)^{\frac{1}{4}}$. [4 *Marks*]

(b) If $\tan(A+iB)=(x+iy)$, prove that

(i) $\tan 2A=\frac{2x}{1-x^2-y^2}$ (ii) $\tan h2B=\frac{2y}{1+x^2+y^2}$. [4 *Marks*]

(c) Prove that $\log(1+e^{2i\theta})=\log(2cos\theta)+i\theta$. [4 *Marks*]

Q.2

(a) Solve: $(x^2-y^2)dx=2xy\,dy.$ [4 *Marks*]

(b) Solve: $(y+logx)dx-(x)dy=0.$ [4 *Marks*]

(c) Two particles fall freely, one in a medium whose resistance is equal to k times the velocity and other in a medium whose resistance is equal to k times the square of the velocity. If V_1 and V_2 are their maximum velocities respectively, show that $V_1=V_2^2$. [4 *Marks*]

Q.3 Solve any TWO:

(a) Solve: $(D^2-3D+2)y=e^{3x}$. [6 *Marks*]

(b) Solve: $(D^2-2D+1)y=x\,e^x\,sinx.$ [6 *Marks*]

(c) Solve by the method of variation of parameters

$\frac{d^2y}{dx^2}+y=cosecx$. [6 *Marks*]

Q.4

(a) Find the Fourier series of $f(x) = x^2$ in the interval $(0, 2\pi)$, and hence deduce that

$$\frac{\pi^2}{12} = \frac{1}{1^2} - \frac{1}{2^2} + \frac{1}{3^2} - \frac{1}{4^2} + \cdots$$

[6 *Marks*]

(b) Expand the function $f(x) = \pi x - x^2$ in a half – range sine series in the interval $(0, \pi)$.

[6 *Marks*]

Q.5

(a) The necessary and sufficient condition for vector $\vec{F}(t)$ to have constant magnitude is $\vec{F}(t) \cdot \frac{d\vec{F}(t)}{dt} = 0$.

[6 *Marks*]

(b) A point moves in a plane so that its tangential and normal components of acceleration are equal and angular velocity of the tangent is constant and equal to ω. Show that the path is equiangular spiral $\omega s = Ae^{\omega t} + B$, where A and B are the constant.

[6 *Marks*]

Q.6

(a) Find Curl $\vec{F}$, where $\vec{F} = \nabla(x^3 + y^3 + z^3 - 3xyz)$.

[4 *Marks*]

(b) If $\vec{r}$ is a position vector with $r = |\vec{r}|$, show that

$$\nabla \times (r^n \vec{r}) = 0.$$

[4 *Marks*]

(c) Show that $\iiint_v \frac{dv}{r^2} = \iint_s \frac{\vec{r} \cdot \hat{n}}{r^2} ds$.

[4 *Marks*]

**********Paper End**********