Total No. of Printed Pages:2

SUBJECT CODE NO:- P-16
FACULTY OF ENGINEERING AND TECHNOLOGY
B.E.(CIVIL) Examination May/June 2017
Environmental Engineering-II
(Revised)

[Time: Three Hours] **[Max.Marks:80]**

Please check whether you have got the right question paper.

N.B
1) Question No.1 of Section A and Question No.6 of Section B are compulsory.
2) Answer any two Questions among the remaining Questions (i.e. 2 to 5) of Section A and any two questions i.e.(7to 10) of Section B
3) Assume suitable data. Mention it clearly

Section A

Q.1 Answer the following Questions 10
a) Define Sewerage System? List out the components of it?
b) State the Necessity of waste water characterization?
c) State the advantage of Egg-shaped sewer section
d) The BOD of sewage incubated for one day at 30°C has been found to be 110mg/L. What will be 5 days 20°C BOD. Assume $K_{(20)}$ = 0.1/d.
e) Differentiate between unit operation and unit process in waste water.

Q.2 a) List the information to be collected while planning for sewerage systems. How will you use the corrected information? 07
b) Determine the size of a circular sewer for a discharge of 500 l/s running half full S=0.0001, N=0.015 08

Q.3 a) State where manholes used in sewerage system? Explain working with Neat Sketch 07
b) Determine the BOD load in kg/day in the sewage from a town supplied with 10m/d of water assuming that 60% of the water supplied is returned as waste water with a BOD of 280 mg/lit 08

Q.4 a) State importance of analysis of sewage and Explain the precautions to be taken during collection of sample. 07
b) Explain stream standard and effluent standard 08

Q.5 Write Short Notes (any three) 15
a) Self-cleaning and Non-scouring Velocity
b) Sewer appertences
c) COD
d) Sludge disposal method

Section B

Q.6 Answer the following Questions(Any five) 10
a) Classification of solids present in Sewage
b) Waste Stabilization pond are applicable for sewage management in rural areas only. Comments on this statement and justify your comment.
c) State objective and functioning principal of Secondary treatment unit.
d) Difference between Oxidation pond and oxidation ditch
e) State the necessity of velocity control devices in grit chamber. Name the devices in grit chamber
f) What is sedimentation?

2017

37ED6181055A6753ACCEA0355EC930B3

Q.7	a) Calculate the diameter required for single stage TF which is to yield effluent BOD of 20 mg/lit when treating settled domestic sewage of BOD 120 mg/lit, Waste water flow is 2200m^3/day and recirculation discharge is 4000 m^3/day. Depth of tank is 1.5m	08
	b) Explain working of "Contact Stabilization process of activated sludge method.	07
Q.8	a) Population of town is 20,000 with water supply of 150 lpcd. BOD of waste water is 150 mg/lit. Design the most suitable waste water treatment system without power to the town.	08
	b) Explain Trickling filter with neat sketch	07
Q.9	a)Explain aerated lagoons – principle, advantages and disadvantages	07
	b) What is solid waste? Explain Disposal of Municipal and industrial solid waste	08
Q.10	Write Short Note (any three) a) UASBR b) Grit Chamber c) Sludge digestion d) Nitrogen Removal	15

37ED6181055A6753ACCEA0355EC930B3

Total No. of Printed Pages:2

SUBJECT CODE NO:- P-49
FACULTY OF ENGINEERING AND TECHNOLOGY
B.E.(CIVIL) Examination May/June 2017
Water Resources Engineering-II
(Revised)

[Time: Three Hours] **[Max.Marks:80]**

Please check whether you have got the right question paper.

N.B i)Q.1 and Q.6 are compulsory.
ii) Answer any two questions from remaining question of each section.
iii)Assume suitable data if necessary.
iv) Figures to the right indicate full marks.

Section A

Q.1	a)What do you mean by silting of reservoir? Suggest suitable method to control it.	04
	b) Classify various types of dams.	04
	c) Define with neat sketch Buttress dam.	02
Q .2	a) Explain the procedure for calculating the reservoir capacity for a specific yield from the mass inflow curve.	07
	b) Explain the various investigations of site to be undertaken for developing a water reservoir.	08
Q.3	a)A masonry dam 15.0m high is trapezoidal in section with a top width of 2.0m and bottom width 8.0m the face exposed to water has a batter of 1:10 test the stability of the dam. Assume unit weight of masonry=24kN/m^3.	10
	b) Differentiate between a low gravity dam & high gravity dam in detail.	05
Q.4	a) Explain the different types of Arch dam with neat sketch.	08
	b) Explain the methods for computing the uplift pressure force when: (i)There is no drainage , ii)There is a drainage system.	07
Q.5	Solve any three	15
	a) Explain economic height of dam.	
	b) Write a short note on Earthquake forces on dams.	
	c)Write a short note on Slope protection.	
	d)Explain with neat sketches any two types of earth dams.	

Section-B

Q.6	a)Give the classification of Spillways.	03
	b)Explain with neat sketch Super passage.	03
	c)Draw with neat sketch typical layout of diversion head-works.	04
Q.7	a)Design a suitable section for the overflow section of a concrete gravity dam having d/s face sloping at a slope of 0.75 H:1 V. The design discharge for the spillway is 10000 cumecs. The height of spillway crest is kept at R.L.205.0m. The average river bed level at the site is 100.0m. The spillway length consists of 6 spans having clear span of 11 m each. Thickness of each pier may be taken as 2.5m.	10
	b)Explain with neat sketch Radial Gates.	05
Q.8	a)Explain with neat sketch Syphon Aqueduct and Canal Syphon.	05
	b)Using Lacy's theory design an irrigation channel for the following data: Design discharge =55 cumecs, Side slope=1/2:1, Slit factor=1	10
Q.9	a)Explain with neat sketch Bligh's creep theory for seepage flow.	10
	b)Differentiate with neat sketch Weir and Barrage.	05

2017

B14A4EB9BA063FCD67423B847B055D9A

Q.10 Solve any Three. 15

a)Compute the discharge over an ogee spillway with c=2.3 at a head of 4.5m. The effective length of the spillway is 95.0m. Neglect velocity approach.

b)Write a short note on Energy dissipation.

c)List out the different functions served by canal modules.

d)Explain with neat sketch Fish ladder.

B14A4EB9BA063FCD67423B847B055D9A

Total No. of Printed Pages:1

SUBJECT CODE NO:- P-80
FACULTY OF ENGINEERING AND TECHNOLOGY
B.E.(CIVIL) Examination May/June 2017
Design of Structures- III
(Revised)

[Time: Four Hours] **[Max.Marks:80]**

Please check whether you have got the right question paper.

N.B i) Attempt any two question from section A and B each
ii) use of IS; 456, IS; 3370 is allowed
iii) Assume suitable data, if necessary, state it Cleary

Section A

Q.1 Design on interior panel of flat slab 5m x 6m with a drop for a live load of 5 kN / m^2 show the reinforcement details by neat sketch 20

Q.2 Design a rectangular combined fooling for two columns C and D located at 4.5 m apart. Column c is of size 450 mm x450mm arraying load 1200 kN and column D is of size 550 mm x 550mm carrying load of 1500 kN. The projection of the footing parallel to the length of footing beyond axis of column 'C' is restricted to 12 m SBC of soil is 225 kN/m^2 use of M_{20} and Fe_{415} grades 20

Q.3 a)Explain the following terms in connection with retaining wall 02
i) Angle of repose
ii) Angle of internal friction
iii) Active and passive earth pressure
iv) Factor of safety against sliding

b) A counter fort retaining wall 7.5 m high above G. L.is to be designed to retain a soil backfill inclined at 25°, Density of earth is 16 kN / m^3 and its angle of repose is 30°. Hard strata having SBC of 250 kN / m^2 is available at 1.3 m below ground level .counterforts are provided at 3.2 m c/c. Design the heel slab and counterforts 18

Section B

Q.4 a) Design a circular slab for a room of 7 m effective diameter with fixed edges. Total superimposed load on the slab is 6 kN / m^2. use M_{20} and fe_{500} grades . Show the reinforcement details 10

b) Explain in detail the 'Magnel- Blaton system of prestressing using neat sketches. 10

Q.5 Design a circular water tank of capacity 2, 00,000 liters the depth of tank is limited to 3.2 m. The joint between the wall and base slab is flexible. The base slab rests on the ground. Use IS code method. Show reinforcement detailing .use M_{35} and Fc_{500} grades. 20

Q.6 a) Design the formwork for a column of size 350mm x 350mm, having a height of 3m. It is proposed to pour the entire concrete in one stage 14

b) Explain the necessity of high grade steel and concrete in prestress concrete construction 06

2017

B14A4EB9BA063FCD67423B847B44E219

Total No. of Printed Pages:1

SUBJECT CODE NO:- P-113

FACULTY OF ENGINEERING AND TECHNOLOGY

B.E.(Civil) Examination May/June 2017

Foundation Engineering

(Revised)

[Time: Three Hours] **[Max.Marks:80]**

Please check whether you have got the right question paper.

N.B i)Solve any three question from the each section.
ii) Assume suitable data whenever necessary and state at clearly
iii) Draw neat Sketches whenever required

Section A

Q.1 a) Explain "Wash boring" method of sub soil exploration in detail 07

b) Explain with neat sketches: 07

i) General shear failure

Ii) Local shear failure

iii) Punching shear failure

Q.2 a) Discus the Terzaghi's expression of bearing capacity of soil for square and circular footings 07

b) Discuss the effect of water table on bearing capacity of soil 06

Q.3 a) What is floating foundation? Discuss 06

b) Write a note on differential settlement of soil 07

Q.4 a) Discuss the procedure for proportioning of footing of equal settlement 06

b) Derive the equation for immediate settlement for semi- infinite layer 07

Q.5 Write short notes on: 13

i) Auger Boring
ii) Seismic method of sub soil exploration
iii) combined footing

Section B

Q.6 a) Discuss the designs procedure of pile foundation 07

b) How –pile capacity is decided? Discuss the arrangement of pile also 07

Q.7 a) Discuss tilting and seating of well 07

b) differentiate between open caisson and pneumatic caisson 06

Q.8 a) Explain why drainage of foundation is necessary, describe various methods of soil damage 07

b) what difficulties are encountered in sinking of caisson 06

Q.9 a) Explain pile load test in detail 07

b) Explain different types of cofferdams with neat sketches 06

Q.10 Write short notes on: 13

i) Effect of pile drawing on ground
ii) Sand island method
iii) Design of circular cofferdam

2017

B14A4EB9BA063FCD67423B847B6CFB75

Total No. of Printed Pages:2

SUBJECT CODE NO:- P-148
FACULTY OF ENGINEERING AND TECHNOLOGY
B.E.(Civil) Examination May/June 2017
Elective-I: Prestressed Concrete
(Revised)

[Time: Three Hours] **[Max.Marks:80]**

Please check whether you have got the right question paper.

N.B i) Solve any three questions from section A and B each.
ii) Use of IS 1343-1980 and 456-2000 is permitted.
iii) Assume suitable data and mention it clearly.
iv) Draw neat figures where required.

Section A

Q.1 Answer any three of the following , 14

1) Explain in detail with neat sketch Freyssinet system of prestressing giving its advantages and disadvantages.
2) What is the minimum grade of concrete used for pre and post tensioning? Why high strength steel and high grade concrete is always used in PSC
3) What is anchor block? Which are various methods of its design? Explain IS code method.
4) What is pressure and thrust line? Explain the concept of pressure line with neat sketches

Q.2 A post tensioned PSC beam is designed to support uniformly distributed dead and live loads of 6000 and 9000 N/m respectively. The beam is simply supported over a span of 12m. it is prestressed by 48 wire of 5mm dia.at an average eccentricity of 250mm. The c/s of the beam is symmetrical I section having dimensions as, 300× 750 mm overall depth with flange and web thickness as 120 and 100mm respectively. Determine the maximum stresses developed at various stage of prestressing, if the beam is prestressed by steel stressed to an initial stress of $1000\ N/mm^2$ and the loss ratio is 0.85 13

Q.3 a) Which are the losses occurring during pre and post tensioning? Also distinguish the same in immediate and time dependent losses 02

b) Explain the losses due to shrinkage of concrete 02

c) A post tensioned concrete beam with cable of 24 parallel wires (total area 800 mm^2) is tensioned with 2 wire at a time. The cable with zero eccentricity at end and 150mm at center is on circular curve. The span of a beam is 10m and the cross section is 200× $450mm$deep. The wires are to be stressed from one end to a value of 'f_1' to overcome friction loss and then released to value of' $\mathbf{f_2}$ ' so that immediately after anchoring, an initial prestress of 840N/ mm^2would be obtained. Compute 'f_1' and 'f_2' and final design stress in the steel after all the losses. Consider following data, 09
Coefficient of friction for curvature effect=0.6, coefficient for friction for wave effect=0.003 per meter, slip of anchorage =1.25mm, Es=210 KN/ mm^2, $Ec = 28kN/mm^2$shrinkage of concrete =0.0002, relaxation of steel stress =3% of initial stress.

Q.4 a) Explain the concept of cracking moment. It shall include its definition, the sequence of development of cracks and the factors on which it depends 02

b) A double overhang beam of concrete with supports 8.0m apart has equal overhang of 2.0m. The beam is of rectangular section 200mm wide and 500 mm deep. The beam is prestressed by a parabolic cable having an eccentricity towards soffit and center and an eccentricity towards top at support sections. The beam supports uniformly distributed live load of 7.60 kN/m in addition to its self-weight. Determine the pressure line and locate its position along the length of the beam .The effective prestressing fore in the cable is 11

B14A4EB9BA063FCD67423B847B8C2875

300KN. If the modulus of rupture of concrete is 4.0 N/ mm^2,estimate the load factor against cracking's

Q.5 a) Draw a neat sketch and explain stress distribution in end block, with single anchor plate. Also explain various zones. 02

b) A post tensioned concrete beam having end c/s 750mm wide and 1200 mm deep with cable of 400KN each. The cable are spaced such that the centroid of cable coincides with the C-G-of c/s. Design the anchor plate. Also work out bursting tension, transverse reinforcement and its zone. Use following data, (ratio of width of plate to block is 0.8 and depth of plate to block is 0.5, fy=250 N/ mm^2 11

Section B

Q.6 Answer any three of the following. 14

1) Which are various types of flexural failures in prestressed concrete? Explain with neat sketch the failure of under reinforced section. 05

2) Write stepwise procedure of analysis of composite beam. 04

3) Which are major modes of shear cracking? Explain in detail flexural sheer crack. 05

4) Design consideration of PSC pole 04

Q.7 Design the prestressing force and eccentricity for symmetrical I section beam having flanges of width 260mm and thickness of flange 100mm, thickness of web as 50mm, overall depth of section 520 mm and span 9.0m The supports uniformly distributed load of 8.0 KN/m. Assume compressive strength of concrete of transfer as 15 N/ mm^2,loss ratio =0.80. No tensile stresses are permitted at any stage if 5mm dia HT wires are initially stressed to 1200 N/ mm^2, find no. of wires. 13

Q.8 a) What is need of providing minimum shear reinforcement in beam section? 02

b) A post tensioned bridge girder with un-bonded tendons of box section of overall dimensions 1200 mm wide and 1800 mm deep with wall thickness 150mm. the area of HT wires is 4000 mm^2 and located at an effective depth of 1600mm. The effective prestress in the steel after all losses is 1000 N/ $mm^2$and effective span of girder is 24m. If f_{ck}=40N/ mm^2 f_p=1600 N/ mm^2, calculate the ultimate flexural strength of the section and hence the ud.l. the section can carry exclusive of its self-weight when the supports are simply supported. 11

Q.9 a) An electrical pole of 9.0m high above 4L supports vertical load of 1.20 KN due to weight of wires. It has to carry the reversible horizontal force of 2 KN at top. Design the pole. Assume the loss due to shrinkage and creep as 15%.No tension is allowed. The safe compressive stress is 12.5N /mm^2angle of repose is $30^0$and density of soil is 20KN/m^3. Initial stresses in the steel are 950N/$mm^2$and modular ratio is '6' 11

b) Which are different types of prestressed concrete pipes depending upon the method of construction? Explain the role of circumferential and longitudinal reinforcement in pipe 02

Q.10 a) The floor slab of an industrial building, spanning over 8.0m is to be designed as one way PSC slab with parallel post tensioned cables. The slab is required to support a live load of 10KN/ $m^2$with compressive and tensile stress in concrete at any stage,14.0 and 0 N/mm^2 respectively. Design suitable thickness of slab and estimate maximum horizontal spacing of cable (12 of 5 mm dia. Initially stressed to 1200 N/mm^2) and their position at midspan 10

b) The horizontal prestrese at the centroid of concrete beam of rectangular section 120mm wide and 250 mm deep is 7.00 N/mm^2 and maximum shearing force on the beam is 70KN. Calculate maximum principle tensile stress. What is the minimum vertical prestress required to eliminate this principle tensile stress. 03

B14A4EB9BA063FCD67423B847B8C2875

Total No. of Printed Pages:2

SUBJECT CODE NO:- P-149
FACULTY OF ENGINEERING AND TECHNOLOGY
B.E.(Civil) Examination May/June 2017
Elective-I: Town Planning
(Revised)

[Time: Three Hours] **[Max.Marks:80]**

Please check whether you have got the right question paper.

N.B 1) Answer any three questions from each section.
2) Question no.1 and 6 are compulsory.

Section A

Q.1 Attempt any five 10
1) What are the guiding principles of town planning?
2) Explain Maurya period
3) Describe feudal system of dark ages
4) What "Laissez Fair" activity of 19th century?
5) Explain organic Town concept.
6) Discuss land Acquisition Act-1894
7) What are the objectives of Bye-laws?
8) Describe Refugee Rehabilitation.

Q.2 a) What are the arms and objectives of town planning? 05
b) Why town planning is necessary? 05
c) Describe outbreak of Typhus and Black Death in medieval period. 05

Q.3 a) Discuss the impact of science and technology on town planning. 08
b) What are the Bye-laws of gasoline filling station. 07

Q.4 a) Explain the first sanitary and public health Act of G.B (1840) with its background. 08
b) Describe "Garden city" concept. 07

Q.5 Write short notes on any Three. 15
1) Beginning of civilization
2) Monumental planning
3) Epidemics in 19th century
4) Impact of railways on Town planning
5) India's industrial development in 19th century

Section B

Q.6 Attempt any five 10
1) What are the measures to accomplish aesthetics of town planning?
2) Explain CIVIC survey
3) Describe height zoning
4) What are the functions of roads?
5) What are the effects of slum on town-life?
6) How would you select the sites for parks and play grounds?
7) How would you select the site for public building?
8) What points to be considered while selecting a site for industry?

Q.7 a) Explain the elements of city plan 07
b) Describe the socio-economic survey of town 08

2017

B14A4EB9BA063FCD67423B847B8C3007

Q.8	a)	Explain planning of industrial estate.	07
	b)	Explain traffic congestion in cities. What are the disadvantages and remedies of traffic congestion?	08
Q.9	a)	Explain classification of housing	08
	b)	Describe slum clearance methods. What are the precautions to be taken against slum formation?	07
Q.10	Write short notes on any three		15

1) Master plan
2) Urban renewal
3) Town Centres
4) Industrial waste management
5) Neighborhood planning

B14A4EB9BA063FCD67423B847B8C3007

Total No. of Printed Pages:1

SUBJECT CODE NO:- P-151

FACULTY OF ENGINEERING AND TECHNOLOGY

B.E.(Civil) Examination May/June 2017

Elective-I: Plumbing Engineering

(Revised)

[Time: Three Hours] **[Max.Marks:80]**

Please check whether you have got the right question paper.

N.B 1) Figure to the right indicate full marks

2) Question no.1 and question no.6 are compulsory. solve any two questions from remaining from each section.

Section A

Q.1 A centrifugal pump is used to supply the cold water to the roof tank located at the top of eight floors building. Building consists of 30 flats .each flat is occupied by 5 person. Calculate the efficiency of pump. 10

Q.2 a) Explain in detail design procedure of cold and hot water system in residential building as per UPC-I-2008-India 08

b) Explain the role of various plumbing practitioners in detail. 07

Q.3 a) What is meant by plumbing fixture? State the location and purpose of clinical sink. 08

b) What is vent? Enlist the various types. Explain in detail working principle of any four vent with neat sketch. 07

Q.4 What do you understand by modern cold water supply in residential building. Explain the working principle of modern cold water supply with neat sketch as per UPC-I-2008-india 15

Q.5 a) For the distribution main of a city water supply a 30 cm main is required. As pipes above 25cm are not available it is decided to lay two parallel mains of same diameter. Calculate the diameter of parallel main. 08

b) What is plumbing fixtures? Enlist various plumbing fixtures. Explain any four in detail with neat sketch. 07

Section B

Q.6 What do you understand by grouping of drainage system. Explain in detail with neat sketch one pipe and two pipe sanitary drainage system. 10

Q.7 a) Calculate the velocity and rate of flow in the sewer having diameter 40 cm with an invert slope of 1 in 600 sewer is running one half fuel. Take Manning's constant N=0.015 08

b) What is rain water harvesting? Why rain water is to be harvested? Explain in detail rain water harvesting system component's in case of residential building 07

Q.8 A combined sewer of circular cross section is to be constructed for a colony. Calculate its size from the following data. 15

1) Area covered by sewer line=100 hectors
2) Population = 90,000
3) Maximum velocity of flow =3m/sec.
4) Time of entry =3 minutes
5) Time of flow =17 minutes
6) Rate of water supply =240 lit/head/day
7) Impermeability factor =0.50

Assume suitable data if necessary

Q.9 a) Enlist the various types of test for sewer line. Explain all in detail. 08

b) Explain various principle of good sanitary drainage system. 07

Q.10 a) What do you understand by lifting of sewage. Enlist the various types of pumps used for lifting of sewage. Explain lifting of sewage by centrifugal pump with sketch 08

b) Explain with neat sketch village sanitary system in detal. 07

B14A4EB9BA063FCD67423B847B8C520E

Total No. of Printed Pages:1

SUBJECT CODE NO:- P-152
FACULTY OF ENGINEERING AND TECHNOLOGY
B.E.(Civil) Examination May/June 2017
Elective-I: Ground Water Engineering
(Revised)

[Time: Three Hours] **[Max.Marks:80]**

Please check whether you have got the right question paper.

N.B i) Solve any two questions from question no.1 to 4 and any two from question no.6 to 9.
ii) Question no.5 and question no.10 are compulsory.
iii) Figures to right indicate the maximum marks.

Section A

Q.1	a)	List the various phases of a ground water investigation and give the objectives of Hydrological investigation.	07
	b)	Describe in detail the infiltration mechanism.	07
Q.2	a)	An Artesian aquifer 30m thick has a porosity of 20% and Bulk modulus of compression 10^8 N/ M^{2}Estimate the storage coefficient of the aquifer. What fraction of this is attributable to the expansibility of water? Take $y_w = 9.81kN/m^3$, $k_w = 2.0 \times 10^9 N/m^2$.	07
	b)	What do you mean by springs? Explain the different types of springs.	07
Q.3	a)	Explain any two types of wells with their construction procedure.	07
	b)	What is the importance of test measurement? Enlist the tolerance levels of error considered during test measurement.	07
Q.4	a)	Explain in brief specific retention and specific yield.	07
	b)	Explain in detail Revitalization of wells.	07
Q.5		Write a short note on (any two):	12
	a)	Constant head analysis.	
	b)	Zone of Aeration.	
	c)	Maintenance of wells.	

Section B

Q.6	a)	Explain electrical resistivity method in detail.	07
	b)	Explain magnetic method of groundwater exploration.	07
Q.7	a)	What are methods associated to identify the saline zones and interfaces.	07
	b)	Define artificial recharge and explain the importance of it.	07
Q.8	a)	Explain any two types of pumps with their suitability.	07
	b)	Explain in detail distribution Network.	07
Q.9	a)	Explain in detail Watershed management techniques.	07
	b)	Explain in detail Ground water legislation	07
Q.10		Write a short note on (any two)	12
	a)	Finite element method.	
	b)	Rain water harvesting.	
	c)	Soil reclamation.	

B14A4EB9BA063FCD67423B847B8C6A92

Total No. of Printed Pages:2

SUBJECT CODE NO:- P-205
FACULTY OF ENGINEERING AND TECHNOLOGY
B.E. (Civil) Examination May/June 2017
Transportation Engineering-II
[OLD]

[Time: Three Hours] **[Max.Marks:100]**

Please check whether you have got the right question paper.

N.B
i) Attempt any three questions from section A & three question from section B
ii) Answer to two section must be written in separate answer books
iii) Draw neat sketches wherever necessary

Section A

Q.1	a)	State salient features of Lucknow road plan (1981-2001)	08
	b)	What are the step by step engineering surveys conducted for the highway alignment & location finalization explain in detail	08
Q.2	a)	What are the requirements of an ideal highway alignment explain briefly	08
	b)	Explain different types of sight distances in brief	08
Q.3	a)	A horizontal circular curve of radius 300 m is to be aligned on a two lane highways 7 m wide, in a built up area. the design sped is 65km/h and the wheel base of the design vehicle =6m determine the following 1) Super – elevation 2) Extra width of the pavement needed 3) Length of the transition curve required	10
	b)	Explain PLEV theory with a neat sketch	08
Q.4	a)	Explain CBR method of pavement design. How this method is useful to determine thickness of component layers	08
	b)	Design a system of dowel bars for a cement concrete slab with the following data. Design wheel load =40KN (4100kg) Load transfer desired =45% Slab thickness (h) =220mm Joint width (bj) =2cm Permissible flexural stress in dowel bar $\sigma_s = 1400 kg/cm^2$ Permissible shear stress σ_s'=1000kg/cm^2 Permissible bearing stress on concrete σ_c=100kg/cm^2 k-value of subgrade =7.5 kg/cm^3 E-value of concrete =3 X10^5 kg/cm^2 $p$oisson ratio(r) of concrete =0.15	08
Q.5	a)	Enlist test on bitumen & explain any one in detail	08
	b)	Explain plate bearing test procedure	08

2017

B14A4EB9BA063FCD67423B847BC82EA7

Section B

Q.6	a)	Discuss various traffic studies & their importance	08
	b)	Write down the construction steps for water bound macadam road	08
Q.7	a)	What are traffic islands & its classification discuss in detail	08
	b)	Explain various types of failure in cement concrete pavement & their causes	08
Q.8	a)	Explain the necessity of airport classification. Give different system of classification of airports.	08
	b)	Explain the necessity of airport lighting	08
	c)	Explain the procedure of orienting the runway	
Q.9		Write a short note on any three a) Binder sprayer b) Earthmoving equipment's c) Tunnel high ling & ventilation d) Air traffic control	18
Q.10	a)	What are the requirement of materials, plants & equipments to for cement concrete road constructions? discuss briefly	08
	b)	Explain the method of tunneling in hard rock	08

B14A4EB9BA063FCD67423B847BC82EA7

Total No. of Printed Pages:1

SUBJECT CODE NO:- P-221

FACULTY OF ENGINEERING AND TECHNOLOGY

B.E. (Civil) Examination May/June 2017

Structural Mechanics

(Revised)

[Time: Three Hours] **[Max.Marks:80]**

Please check whether you have got the right question paper.

N.B i) Use of non-programmable calculator is permitted.
ii) Solve any three questions from Section A and Section B, each.
iii)Assume any suitable additional data if required and state it clearly.

Section A

Q.1 a)Write strain displacement relations for a three dimensional state of strain and hence derive strain compatibility conditions. 07

b)Explain Plane Stress and Plane Strain condition of the body. Write constitutive laws for the same. 07

Q.2 Derive with usual notations, governing differential equation for defected shape of cylindrical bending of thin rectangular plate; 13

$\nabla^4 w = \frac{q}{D}$

Q.3 Derive governing differential equation of bending analysis of circular plates subjected to udl q per unit area. 13

Q.4 Explain Navier's solution of rectangular plate subjected to singly sinusoidal load with simply supported boundary conditions on all four edges. 13

Q.5 a)State and explain assumptions made in the analysis of thin plate in Kirchhoff's theory. 04

b)Explain stress invariants. 04

c)Write compatibility conditions for plane stress and plane strain states. 05

Section B

Q.6 Analyze the continuous beam as shown in figure 1) using stiffness matrix method and draw BMD. EI=constant for all spans. 14

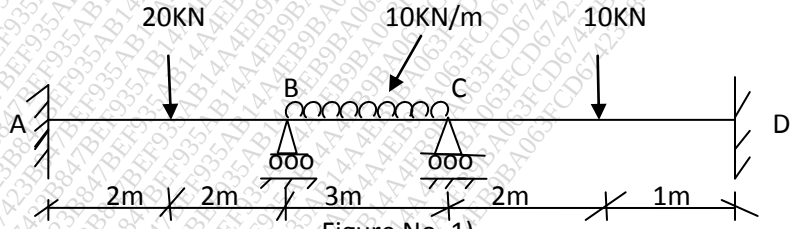

Figure No. 1)

Q.7 a)Explain membrane theory of thin cylindrical shells subjected to transverse loads and hence derive equations for membrane stresses, Nx, Nxθ and Nθ 08

b)Explain general solution for membrane forces in thin cylindrical shells. 05

Q.8 State various approaches used in FEM. Explain energy approach and variation approach with suitable example. 13

Q.9 a) Explain what do you understand by degree of static indeterminacy of structure. Give example of truss, beam and frame at least one each. 06

b)Explain step by step procedure adopted in flexibility matrix method of structural analysis. 07

Q.10 Derive and explain shape functions for one dimensional two noded and three noded elements. 13

2017

B14A4EB9BA063FCD67423B847BEF935A

Total No. of Printed Pages:2

SUBJECT CODE NO:- P-251

FACULTY OF ENGINEERING AND TECHNOLOGY

B.E. (Civil) Examination May/June 2017

Construction Management

(Revised)

[Time: Three Hours] **[Max.Marks:80]**

Please check whether you have got the right question paper.

N.B i) Solve any three questions from each section.

ii) Assume suitable data wherever necessary.

Section A

Q.1	A	Enlist the various qualities of a successful project manager.	07
	B	Enlist the different phases in construction management and also write a short note on project implementation	06
Q.2	A	Which are the various types of concreting equipment used in construction industry? Explain any one in detail.	07
	B	Which equipment is used as earth cutting and handling equipments? Explain bulldozer in detail.	06
Q.3	A	Differentiate between CPM and PERT.	07
	B	Explain work breakdown structure for a house construction project in development network.	06
Q.4		Explain the rules for networks.	07
		Define the following terms (Any three)	06
		i. Critical path	
		ii. Free float	
		iii. Slack	
		iv. Standard deviation.	
Q.5		A building project consists of 10 activities represented by network as shown in fig. normal duration required to perform the various activities are given below:	14

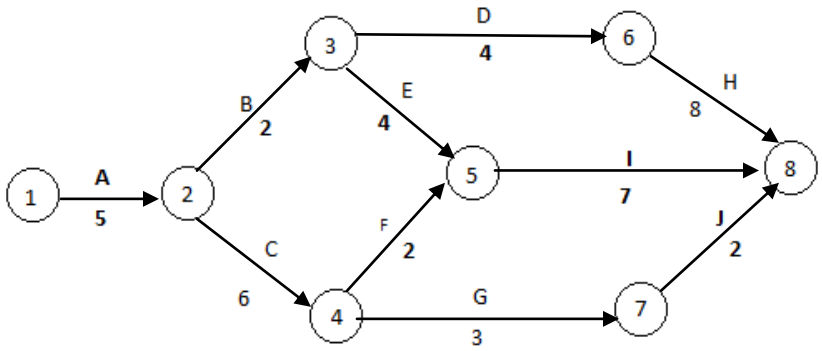

Calculate: I) EST, EFT, LST, LFT

II) Total float.

Also determine the critical path.

2017

B8E73B6AF8A2491F94676299C91A12C3

Section B

Q.6	A	Explain the term Net present value.	07
	B	Write a short note on 'payback period' and 'cash flow Diagrams'.	07
Q.7	A	Write your views about safety lacunae prevailing in Indian construction scenario and suggest the remedial measures for the purposes.	07
	B	What is effective communication? How will you overcome from the barriers in effective communication?	06
Q.8	A	Explain in detail ABC analysis for inventory control	07
	B	Write a note on material management with its objectives.	06
Q.9	A	What is the importance of written communication?	07
	B	Explain man power management in construction industry.	06
Q.10	A	A construction company purchases 25000 bags of cement annually. Each bag of cement cost Rs 270/- and the cost incurred in processing each lot is Rs. 180/-the cost of carrying is 30%. What is the most EOQ? What is average inventory level?	07
	B	State and explain different types of software are used in construction industry.	06

B8E73B6AF8A2491F94676299C91A12C3

Total No. of Printed Pages:3

SUBJECT CODE NO:- P-282
FACULTY OF ENGINEERING AND TECHNOLOGY
B.E. (Civil) Examination May/June 2017
Professional Practice
(Revised)

[Time: Three Hours] **[Max.Marks:80]**

Please check whether you have got the right question paper.

N.B
i) Question No.1 is compulsory and solve any two questions from remaining in Section 'A'.
ii) Attempt any three questions from Section 'B'.
iii) Figures to the right indicate full marks.
iv) Assume suitable data wherever necessary.

Section A

Q.1 Workout the quantities of various items of wall shown in (fig.1) 20
a) Earthwork in excavation in foundation.
b) P.C.C. work in foundation with (1:4:8) proportion.
c) Brickwork in (1:6) foundation & plinth
d) Damp proof course 2.5 cm thick.
e) Plastering (1:6) both sides of wall & plinth wall.

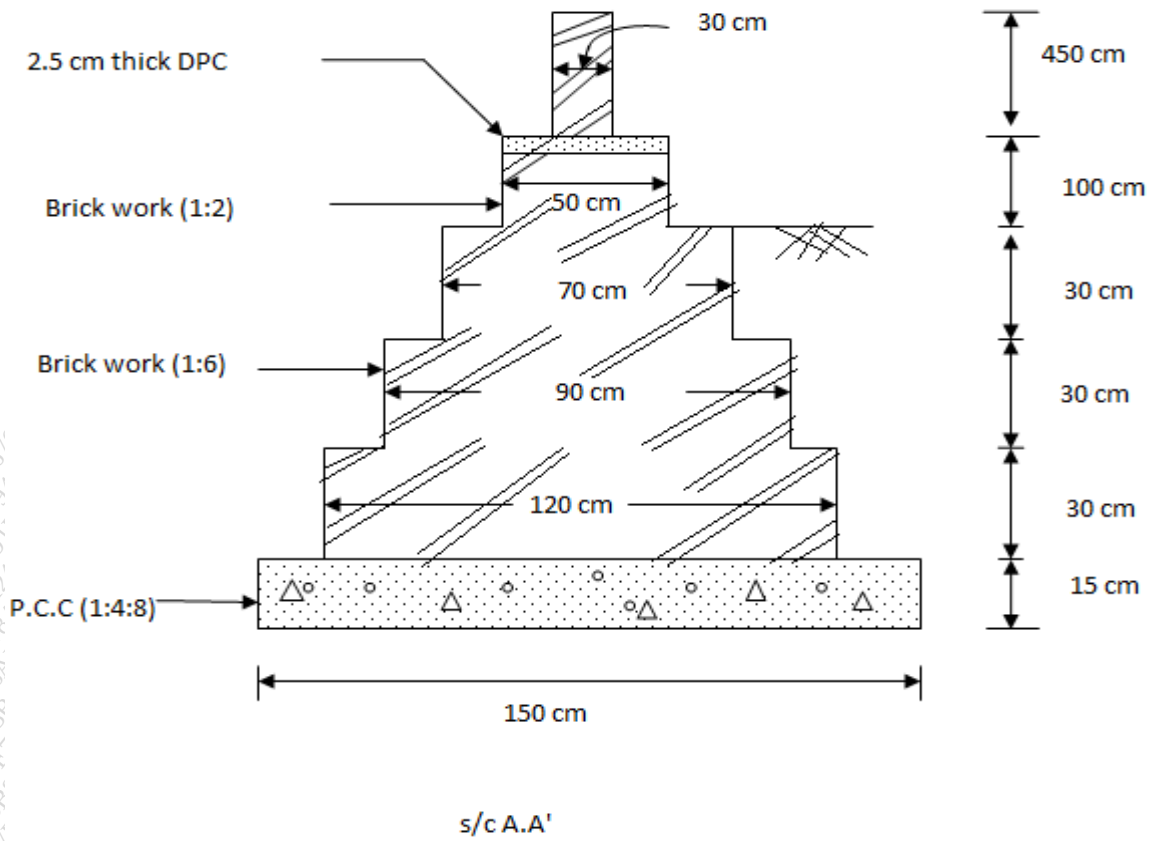

2017

B8E73B6AF8A2491F94676299C939527B

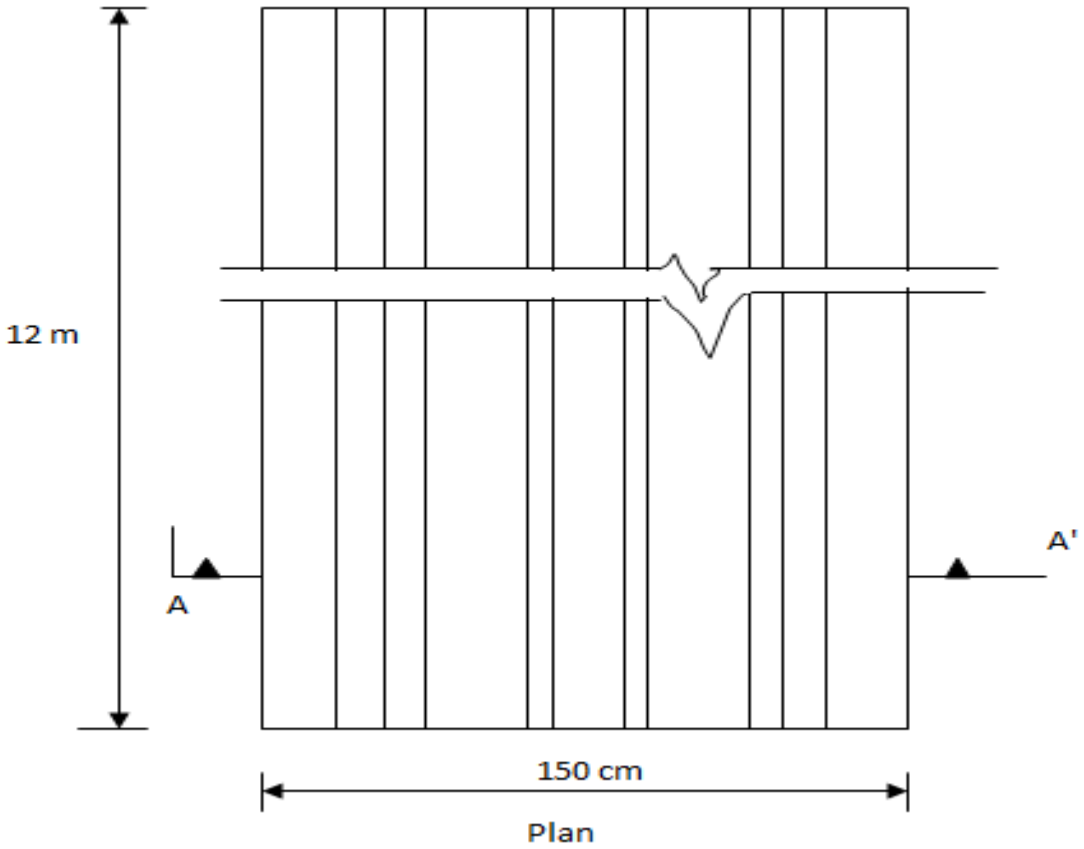

Q.2 Write the detailed specification for: 10

a) Pipeline laying work

b) 3 coat oil bound painting work on new surface of plastering.

Q.3 Carry out the rate analysis for: 10

a) Pointing on a brickwork in C.M. (1:6)

b) Two coat cement mortor plastering for brickwork masonry in (1:2)

Q.4 Explain the following :

a) Explain P.W.D. Method 04

b) Discuss volume reduction theory of concrete Mortor 04

c) Principles in writing specification 02

Section B

Q.5 Explain the following in detail

a) N.A. & Sale deed 02

b) Breach of contract 04

c) Liquidated damages 04

d) M.R. & N.M.R. 04

Q.6 a) What is contract ? Explain various types of contract ? Explain the any two advantage. 06

2017

B8E73B6AF8A2491F94676299C939527B

b) Which are the different agencies involved in construction industry 07

Q.7 a) Explain the procedure for submission & opening of tender for construction work 06
b) Explain in detail the sinking fund method of cost depreciation with table. 07

Q.8 a) Explain the process for housing loans EMI & repayment conditions 06
b) Explain administrative approval & technical sanction 07

Q.9 Write short Note on:
a) Building bye-laws & norms. 04
b) M.A.S. Account 04
c) Discuss about M.B. in detail 05

B8E73B6AF8A2491F94676299C939527B

Total No. of Printed Pages:2

SUBJECT CODE NO:- P-314
FACULTY OF ENGINEERING AND TECHNOLOGY
B.E. (Civil) Examination May/June 2017
Advanced Structures [Elective-II]
(Revised)

[Time: Four Hours] **[Max.Marks:80]**

Please check whether you have got the right question paper.

N.B
i) Attempt any two question's from each section
ii) Use of IS 456 : 2000 is allowed
iii) Use of Non-programmable calculator is allowed
iv) Assume suitable data it required & state it clearly .

Section A

Q.1 Fig-1) shows a layout of the columns of building. The outer columns are 400×900 mm in size & carry a load of 600kN each. The inner column are 450×450 mm in size & carries a load of 800kn each. In addition to this it is subjected to moment of 1000 kN-m due to wind load along the length of the building SBC of soil is 100 kN/m^2. Use m_{20} & Fe_{415} grade steel. 20

Design the following
i) Slab
ii) Secondary beam BE
iii) Calculate the loading on main beam ABC

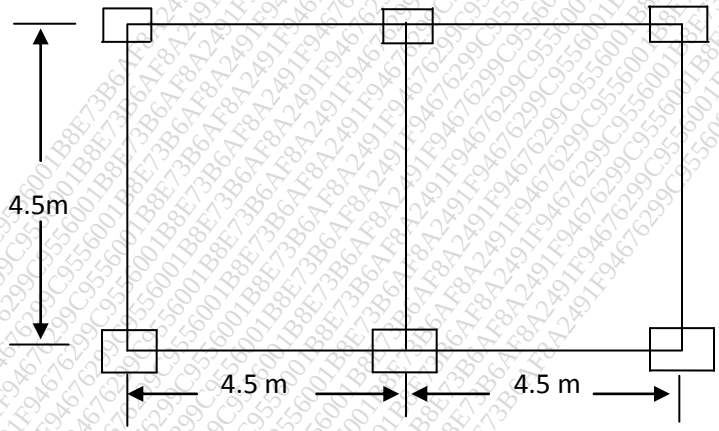

Fig -1

Q.2 a) Design a pile of a foundation to carry an axial load of 500kN. The pile is to be driven to a hard stratum, which is available at a depth of 8.5 m. Use M_{25} & Fe_{415} grades 10

b) Design a pile cap supported by three piles 250 mm ×250 mm in size. The center to center distance between piles is 1.4 m. the load coming on pile cap of a column 450 mm ×450 mm in size is 700kN Use M_{25} & Fe_{415} grades. show reinforcement detailing 10

B8E73B6AF8A2491F94676299C9556001

Q.3 A curved beam is in the form of a full continuous circle in plan with a radius of 4 m & supported continuously on six supports. The beam Carries a Udl of 2.5 kN/m, inclusive of its own weight. Determine the B. M. twisting, moment & shear force at salient location's & plot B. M, T. M. & S. F. diagrams 20

No. of supports	2θ	C_1	C_2	C_3	$\emptyset$
06	60^0	0.089	0.045	0.009	12.75^0

Section B

Q.4 a) Explain the following terms with reference to bridges. Distribution of wheel load on slab, Dispersion of load along span, ground contact area 12

b) Explain various types of transmission towers & their utility in load resistance 08

Q.5 a) What are types of folded plates their components & their action & assumption made in analysis of folded plate? 12

b) Derive the relation for edge shear in folded plates 08

Q.6 a) Design a deep beam 300 mm wide & 4 m deep, simply supported over a clear span of 6 m. the beam carries a live load of 160KN/m at the service state & is supported on walls of 600 mm thick on each end. Use M_{20} concrete & Fe_{415} steel having permissible tensile stress of 230N/mm^2. Show reinforcement details 12

b) Compare the design of deep beam by British & American code 08

B8E73B6AF8A2491F94676299C9556001

Total No. of Printed Pages:2

SUBJECT CODE NO:- P-315

FACULTY OF ENGINEERING AND TECHNOLOGY

B.E. (Civil) Examination May/June 2017

Pavement Design [Elective-II]

(Revised)

[Time: Three Hours] **[Max.Marks:80]**

Please check whether you have got the right question paper.

N.B 1) Attempt any three Question from each section

2) Assume suitable data if necessary

Section A

Q.1 (a) Write in detail IRC Guideline for the design of concrete pavement 07

(b) Calculate wheel load stresses at interior, edge & corner using westergaard stresses if 06

(i) wheel load = 4100 kg

(ii) Slab thickness = 18 cm

(iii) Poisson's ration = 0.15

(iv) Modulus of subgrade reaction = 12. 0 kg/m^3

(v) Radius of contact area = 16 cm

Q.2 (a) Design a Dowel bar system, if wheel load is 4100 kgs, expected load transfer is 35%, slab thickness is 18 cm, joint width is 2.5 cm take K=8.5 kg/cm^3, E = 3 x 10^5 kg/cm^2 & μ=0.15. The permissible shear stresses in bar is 1400kg/cm^2 , & flexural stresses are 1000kg/m^2. Whereas permissible stresses in bearing in concrete is 100 kg/cm^2 07

(b) Explain type of joints in concrete. 06

Q.3 (a) What is composite pavement? What are the advantages of composite pavement? 06

(b) Explain U.K. standard design method of composite pavement. 07

Q.4 (a) Explain different factor to be consider for design of pavement. 06

(b) Explain any one mechanistic method of rigid payment 07

Q.5 Write a note on following.

(i) Temperature stresses in C.C. pavement 05

(ii) Design of the bar 05

(iii) Design period. 04

Section B

Q.6 (a) Explain benefit cost ratio method for economic analysis of highway 06

(b) Write a note on shelf life of pavement design 07

Q.7 (a) What is composite pavement? What are its advantages? 07

(b) Explain French method of composite pavement design. 06

2017

B8E73B6AF8A2491F94676299C955B178

Q.8 (a) Explain vehicle operation cost and its components in retail. 07

(b) Design a flexible pavement by AASHTO method, if CBR of Subgrade is 3.0%. The E SAL is 6.5 million. 06
The reliability needed is 90% & standard deviation is 0.3. The loss in serviceability expected is 2.5. The layer co-efficient for Asphalt layer is 0.14. Base Course had CBR is 35% & sub base course is 15%. The drainage condition is good for base & subbase course.
The moisture remains saturated for 20% of time.

Q.09 (a) Explain single layer theory proposed by Boussineq's for design of flexible pavement. 06

(b) Write a note on AASHTO Road test. 07

Q.10 Write a note on following
(i) Layered elastic Mechanistic method., 05
(ii) Failure criterion in Mechanistic method. 05
(iii) Rate of return method for economic Analysis 04

B8E73B6AF8A2491F94676299C955B178

Total No. of Printed Pages:2

SUBJECT CODE NO:- P-316
FACULTY OF ENGINEERING AND TECHNOLOGY
B.E. (Civil) Examination May/June 2017
Earthquake Engineering [Elective-II]
(Revised)

[Time: Three Hours] **[Max.Marks:80]**

Please check whether you have got the right question paper.

N.B
i) Q.No.1 and Q.No.6 are compulsory.
ii) Attempt any two questions from the remaining questions in each section
iii) Assume suitable data if necessary.
iv) Use of IS 1893-2002 , IS 4326, IS 4327, IS 4328, IS 13920-1993 are permitted.

Section A

Q.1	a)	Define the following terms with sketch: i) Focus iii) Focal Depth ii) Epicenter iv) Epicentral distance	05
	b)	What are the causes of earthquake?	05
Q.2	a)	What do you understand by elastic rebound theory? Explain in detail.	08
	b)	Explain in detail the utility of free vibration analysis.	07
Q.3	a)	Explain in detail the factor affecting Response spectrum.	07
	b)	Explain in detail magnitude of earthquake & intensity of earthquake.	08
Q.4	a)	Find the expression for the response of a single degree of freedom system for critical, under critical & over critical damping	08
	b)	i) state & explain degree of freedom	04
		ii) explain dynamic equilibrium	03
Q.5	Write short notes (any three)		15
	i)	damped free vibration	
	ii)	critical damping & over damping	
	iii)	effects of earthquake	
	iv)	seismic zones in India	

Section B

Q.6	a)	Explain earthquake design philosophy in detail	05
	b)	What are the methods of counteract liquefaction?	05
Q.7	a)	What is meant by soft story? Explain IS 1893-2002 provisions for soft story.	08
	b)	How are the base isolation techniques adopted for formation of building? Explain in detail.	07

B8E73B6AF8A2491F94676299C9562131

Q.8 Calculate the story shear distribution as per IS 1893-2002 for the frame shown in fig. Assume zone IV, SMRF frame with infilled walls, foundation is on hard rock. Assume suitable data if necessary. 15

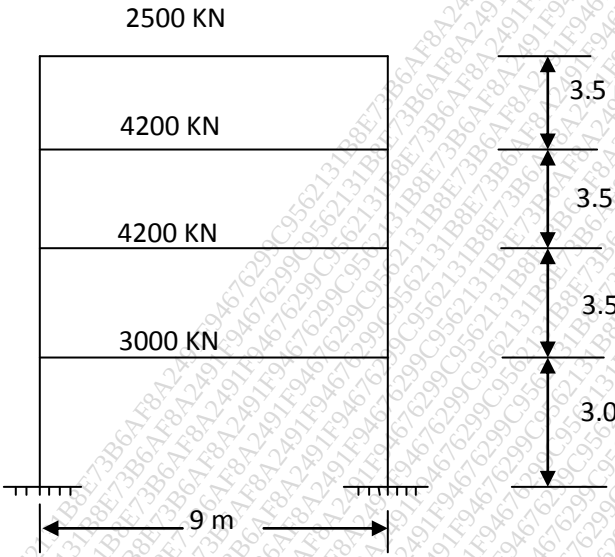

Q.9 a) Explain the various codal provision for ductile detailing of longitudinal reinforcement in a beam 08

b) Explain in detail – 07

i) Base Isolation

ii) Seismic dampers

Q.10 Write short note. (any three) 15

a) Plan irregularity

b) Ductile Detailing as per IS 13920-1993

c) Shear wall

d) Building configuration

e) Ducticity of structure

B8E73B6AF8A2491F94676299C9562131

Total No. of Printed Pages:2

SUBJECT CODE NO:- P-317
FACULTY OF ENGINEERING AND TECHNOLOGY
B.E. (Civil) Examination May/June 2017
Industrial Waste Treatment [Elective-II]
(Revised)

[Time:ThreeHours] **[Max.Marks:80]**

Please check whether you have got the right question paper.

N.B
i) Q.No.1 from section A and Q.No.6 from section B are compulsory.
ii) Answer any two questions among the remaining questions (i. e 2 to 5) of section A and any two questions (i. e 7 to 10) of section B
iii) Neat diagram must be drawn wherever necessary
iv) Assume suitable data if required clearly stating the relevant assumptions

Section A

Q.1	a)	Explain importance and functions of CPCB	05
	b)	Explain Streeter and Phelps equation of dissolved oxygen	05
Q.2	a)	Explain the process volume reduction and its importance	07
	b)	Explain by product recovery with suitable examples	08
Q.3	a)	What do you mean by environmental Audit and also explain its importance	07
	b)	Explain waste water disposal by land treatment and Dilution into sea	08
Q.4	a)	A town discharges 80 cumecs of sewage into a stream having a rate of flow of 1200 cumec during lean days, at a 5 day BOD of sewage at the given temperature is 250 mg/Lit. Find the amount of critical D.O deficit and its location in downstream portion of stream Assume de oxygenation coefficient k as 0.1 and coefficient of self-purification(f_s) as 3.5 Assume saturation D. O at given temperature as 9.2 mg/lit	08
	b)	Explain Zones of pollution in streams with neat diagram	07

Q.5 Write short notes on (any three) 15
a) EIA
b) Neutralization Process
c) Environmental audit
d) Water pollution control Act
e) Self-purification of Lakes.

Section B

Q.6	a)	Explain Design consideration of activated sludge process Based on kinetics	05
	b)	Explain treatment process of paper and pulp industry	05
Q.7	a)	Explain high rate anaerobic filters	08
	b)	How advance waste water treatment Differ from conventional waste water treatment	07

B8E73B6AF8A2491F94676299C956265C

Q.8 a) Explain the process of electro dialysis and air stripping process in waste water treatment 05

b) An average operating data for conventional activated sludge treatment plant is as follows 10

i) Waste water flow – 50000 M^3/day

ii) Volume of aeration tank – 15500 M^3

iii) Influent BOD – 200 Mg/ Lit

iv) Effluent BOD – 25 Mg /Lit

v) MLSS – 3000 Mg/ Lit

vi) Effluent suspended solids 40 Mg/ Lit

vii) Waste sludge suspended solids - 12000 Mg / Lit

viii) Quantity of waste sludge – 250 M^3/day

Based on above information determine

a) Aeration period

b) F/M ratio

c) Efficiency of BOD removal

d) Sludge age

Q.9 a) Explain treatment of sugar industry waste water 07

b) What is an algal bacterium symbiotic in oxidation pond to treat waste water and also explain design considerations for oxidation pond 08

Q.10 Write short notes [<u>any three</u>] 15

a) Environmental impact of radio active waste

b) Detention period

c) F/m ratio

d) Chemical precipitation

e) UASBR

B8E73B6AF8A2491F94676299C956265C