Total No. of Printed Pages:2

SUBJECT CODE NO:- E – 162
FACULTY OF ENGINEERING AND TECHNOLOGY
T.E.(Mech) Examination Nov/Dec 2017
Industrial Hydraulics and Pneumatics
(REVISED)

[Time: Three Hours] **[Max.Marks:80]**

Please check whether you have got the right question paper.

N.B
i. Solve any three questions from each section.
ii. Assume suitable data wherever necessary.

Section A

Q.1
a) State the Pascal's law. Explain its significance in hydraulic and pneumatic system. 05
b) Draw a basic hydraulic circuit showing various components of a circuit. Explain the function and working of each of the component. 08

Q.2 Draw the following symbols along with its application. 13
i) FRL
ii) 3/2 DCV
iii) Single acting cylinder
iv) 5/2 DCV
v) Pressure booster.

Q.3
a) With a neat sketch explain the construction and working of a Lobe type compressor. 05
b) With neat sketch explain the construction and working of internal gear pump Gerotor pump. 08

Q.4
a) With neat sketch explain the construction and working of an air filter, regulator and lubricator unit used in pneumatics. 08
b) With neat sketch explain the construction and working of internal gear motor. 05

Q.5 Write short note on (any three) 14
i) Bernoulli's equation and its application
ii) Gerotor pump
iii) Pressure booster
iv) Accumulators
v) Uses and general rules of hydraulic and pneumatic symbols.

Section B

Q.6 a) What are the different types of pipes used in hydraulic and pneumatic circuit? List the different accessories used in the piping. 05

b) What are the different types of DCV? State their application by using symbolic representation. 08

Q.7 Draw the sequencing circuit for operating two double acting cylinders in sequence in both strokes use appropriate component for the circuit & explain its working for a hydraulic system. 13

Q.8 Draw a circuit for a hydraulic press where for safety, the operator is required to engage his both the hands to operate the stroke of the press. Consider a double activity cylinder, press button operated control valves. Explain the working of its circuit. 13

Q.9 The opening and closing of a door is activated by using two push button switch PB1 & PB2 switch PB1 is for opening and PB2 is for closing the door. The cylinder is controlled by a double solenoid valve draw the electro pneumatic circuit. 13

Q.10 Write a short note on (any three) 14

a) Meter in & meter out circuit
b) Air dryers
c) Limit switches used in circuit
d) Relays
e) Shuttle value

Total No. of Printed Pages:3

SUBJECT CODE NO:- E – 06
FACULTY OF ENGINEERING AND TECHNOLOGY
T.E.(MECH/PROD) Examination Nov/Dec 2017
Desing of Machine Elements - II
(REVISED)

[Time: Three Hours] **[Max.Marks:80]**

Please check whether you have got the right question paper.

N.B
1. Attempt any three questions from each section.
2. Assume suitable data if necessary.
3. Use of non-programmable calculator & design data book is allowed.

Section – A

Q.1 A pair of spur gears with 20° full depth involute teeth consists of 25 teeth Pinion Meshing with 75 teeth gear. The Pinion rotates at 1760 r.p.m. & receives 30 KW power through its shaft. The Pinion as well as gear are made of steel & the permissible bending stress is 150 MPa. The gears and machined to the accuracy of Grade – 10 for this grade $e = 16 + 1.25\emptyset_p$. Where $\emptyset_p = M + 0.25\sqrt{d}$ where e is the error in microns and m & d are module & pitch circle diameters in mm, respectively design the gears. Specify their dimension & find out – the required value of surface hardness for the gears. 14

Q.2 Two parallel shafts are connected by a pair of helical gears to transmit 15 kw at 4000 r. p. m. of pinion. The safe static strength for the material of both gears is 100 MPa. Gear ratio is 4 stub teeth with 20° pressure angle in diametral plane have helix angle of 45°. Calculate the necessary BHN from the wear consideration check the design for beam strength and dynamic load. 13

Q.3 A pair of bevel gears with 20° pressure angle consist of 20 teeth pinion meshing with a 30 teeth gear. The module is 4mm while the face width is 20 mm. The material for the Pinion & gear is steel 50cu (sut = 750 N/mm^2). The gear teeth are lapped & ground (class – 3) & the surface hardness is, 400 BHN. The Pinion rotates at 500 r.p.m. and receives 2.5kw power from the electric Motor. The starting torque of the motor is 150% of the rated torque. Determine the failure of safety against bending failure & against pitting failure. 13

Q.4 A plate clutch is to transmit 130kw at 400r.p.m. The plate clutch has maximum diameters of 540mm with maximum lining pressure 0.3 MPa. The coefficient of friction is 0.28. Determine inside diameter & spring force to engage the clutch. If safe shear stress for the spring material is 560mpa, the spring index is 7 and six springs are used, determine spring wire diameter. 13

Q.5 Write short note on (Any three) 13
a) Causes of gear failure
b) Merits & demerits of worm & worm wheel.
c) Types of gear trains
d) Friction materials of clutches.

Section – B

Q.6 a) Explain bearing characteristics number explaining its significance in the design of sliding contact bearing. 04

b) Following data refers to 360° (full) Hydro dynamic bearing. 10

Journal diameter = d = 75mm.
Bearing length = l = 75mm
Radial clearance = C = 0.05mm.
Minimum film thickness = h_o = 0.02mm
Journal speed = N = 420r.p.m
Radial load = W = 3500N
Cp for oil = 1.75 kJ / kg°C
ϱ of oil = 0.9 gm /CC.
Calculate

a) Required viscosity of oil z
b) The coefficient of friction μ
c) The heat generated Hg
d) The amount of oil Pumped through the bearing's.

Q.7 A deep grove ball bearing with the inner race rotation has a 10 sec work cycle as follows 13

For 2sec : F_r 3567 N $f_a = 178\mu$N,
N = 900r.p.m & light shock for 8 sec Fr = 2675N
fa = 0, M = 1200 r.p.m. & steady shock .

The static & dynamic load ratings of the bearing are $Co = 16225\ N$ and C = 22825 N respectively find the rating life of the bearing in years of 275 days each for 8 hrs a day operation.

Q.8 a) Explain the initial tension in belt . 03

b) Two pulleys of 100mm & 150mm in diameter are connected with open flat belt. The centre distance is 400mm. 10 kw of power is transmitted with a belt of speed of $0.96 \times 10^6 mm/min$. Assume $\mu = 0.3$, a slip of 2% on driver shaft & 1.5% that on the driver shaft, 5% friction loss at each shaft & an overload of 20% determine 10

a. r.p.m of each shaft
b. Belt tension
c. Length of belt.

Q.9 A differential band brake is shown in figure 01. The width & thickness of the steel band are 100mm & 3 mm respectively & the maximum tensile stress in the band is 50 N/mm$^{2.}$ The coefficient of friction between the friction lining & the brake drum is 0.25 calculate 13

i) The tension in the band
ii) The actuating force
iii) The torque capacity of the brake.

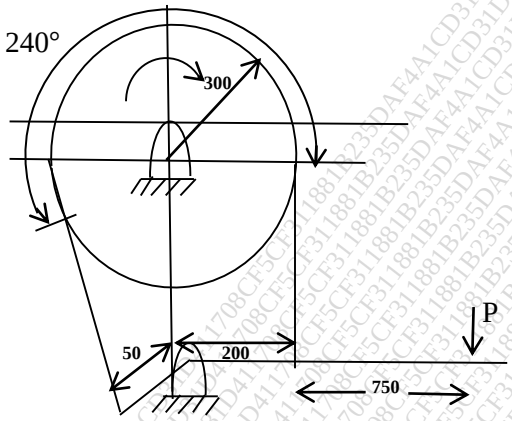

Figure – 01

Q.10 Write short note on (Any three) 13

a) Petroff's equation
b) Miner equation
c) Stribeck's equation
d) Chain drive.

Total No. of Printed Pages:02

SUBJECT CODE NO:E-29
FACULTY OF ENGINEERING AND TECHNOLOGY
T.E.(MECH) Examination Nov/Dec 2017
Heat Transfer
(REVISED)

[Time: Three Hours] **[Max.Marks:80]**

Please check whether you have got the right question paper.

N.B
i) Solve any three questions from each section.
ii) Figure to the right indicates full marks.
iii) Assume suitable data, if necessary.
iv) Use of non programmable calculator is allowed.

Section A

Q.1 a) Explain different modes of heat transfer. State the basic laws for these modes. 06

b) A pipe (k = 180 W/m^{0}C) having inner and outer diameters 80mm and 100mm respectively is located in a space at 25^{0}C. Hot gases at temperature 160^{0}C flow through the pipe. Neglecting surface heat transfer coefficients, calculate: 07
i) The heat loss through the pipe per unit length
ii) The temperature at a point halfway between the inner and outer surfaces

Q.2 a) The interior of a refrigerator having inside dimensions of 0.5m X 0.5m base area and 1m height is to be maintained at 6^{0}C. The walls of the refrigerator are constructed of two mild steel sheets 3mm thick (k= 46.5 W/m ^{0}C) with 50 mm of glass wool insulation (k = 0.046 W/m ^{0}C) between them. If the average heat transfer coefficients at the inner and outer surfaces are 11.6 W/m^2 ^{0}C and 14.5W/m^2 ^{0}C Respectively, calculate: 08
i) The rate at which heat must be removed from the interior to maintain the specified temperature in the kitchen at 25 ^{0}C, and
ii) The temperature on the outer surface of the metal sheet.

b) Explain: Biot number and Fourier number. 05

Q.3 a) Starting with boundary conditions, derive the expressions for temperature distribution along the length and heat flow rate for a very long fin using standard notations. 08

b) Fins are more effective, when provided on the surface for which film heat transfer coefficient is smaller, explain. 05

Q.4 a) Find the convective heat loss from a radiator 0.6 m wide and 1.2 m high maintained at a temperature of 90 ^{0}C in a room at 14 ^{0}C. Consider the radiator as a vertical plate. 06

b) Differentiate between Hydrodynamic boundary layer and thermal boundary layer 07

Q.5 a) Write short notes on (Any two) 14

i) Reynolds Number & it's significance

ii) Nussult Number & it's significance

iii) Fourier Number & it's significance

Section B

Q.6 a) Explain film and drop wise condensation 06

b) Draw the pool boiling curve and explain six regimes of pool boiling curve. 07

Q.7 a) State and prove Kirchhoff's law. 05

b) The large parallel planes with emissivity's 0.3 and 0.8 exchange heat. Find the percentage reduction when a polished aluminum shield of emissivity 0.04 is placed between them. 08

Q.8 a) A chemical (Specific heat = 3.2 kJ/kg K) enters a parallel flow heat exchanger at 150^0C at a flow rate of 30,000 kg/hr. Cooling water (specific heat = 4187 J/kg K) enters the heat exchanger at 20^0C at a flow rate 1000 kg/min. Heat transfer area of the heat exchanger is 12 m^2. Over all heat transfer coefficient can be taken as 1000 W/m^2K. Find the effectiveness of the heat exchanger and outlet temperatures of both chemical and water. 08

b) Classify the heat exchanger. 05

Q.9 a) Derive LMTD for parallel flow. 06

b) An oil cooler for a lubrication system has to cool 1000kg/h of oil (Cp = 2.09 kJ / kg^0C) from 80^0C to 40^0C by using a cooling water flow of 1000 kg/h at 30^0C. Give you choice for a parallel or counter flow heat exchanger, with reasons. Calculate the surface area of the heat exchanger, if the overall heat transfer coefficient is 24 $W/m^2\,^0$C. 07

Q.10 Write explanatory notes on : (Any two) 14

i) Wien's displacement law

ii) Radiation shield

iii) Shape factor

Total No. of Printed Pages:3

SUBJECT CODE NO: E-60
FACULTY OF ENGINEERING AND TECHNOLOGY
T.E.(Mech) Examination Nov/Dec 2017
Tool Engineering
(OLD)

[Time:Four Hours] **[Max.Marks:80]**

Please check whether you have got the right question paper.

N.B
1) Attempt any three questions from each section
2) Assume suitable data and dimensions if required
3) All dimensions are in mm

Section-A

Q.1 a) How does rake angle affect the life of cutting tool 05

b) During the orthogonal cutting operation the following data has been observed 08

Uncut chip thickness; t = 0.127mm
Cutting speed ; v=2m/s
Chip thickness ; t_c = 0.228mm
Rake angle ; $\propto = 10^o$
Width of cut ; b = 6.35mm
Cutting force ; F_c = 567N
Thrust force ; F_t = 227N

Determine shear angle, the friction angle, shear stress along the shear plane and the power for the cutting operation

Q.2 a) Discuss various types of tool wear 05

b) Sketch and discuss the nomenclature of a twist drill. 08

Q.3 a) Explain in detail different methods of designation of cutting tools. 08

b) What is jig and fixture? Explain why jig and fixture are used 05

Q.4 Design,draw and dimensions a drill jig to drill a holes of Φ 10mm, 4 holes in a component shown in fig. No.1 14

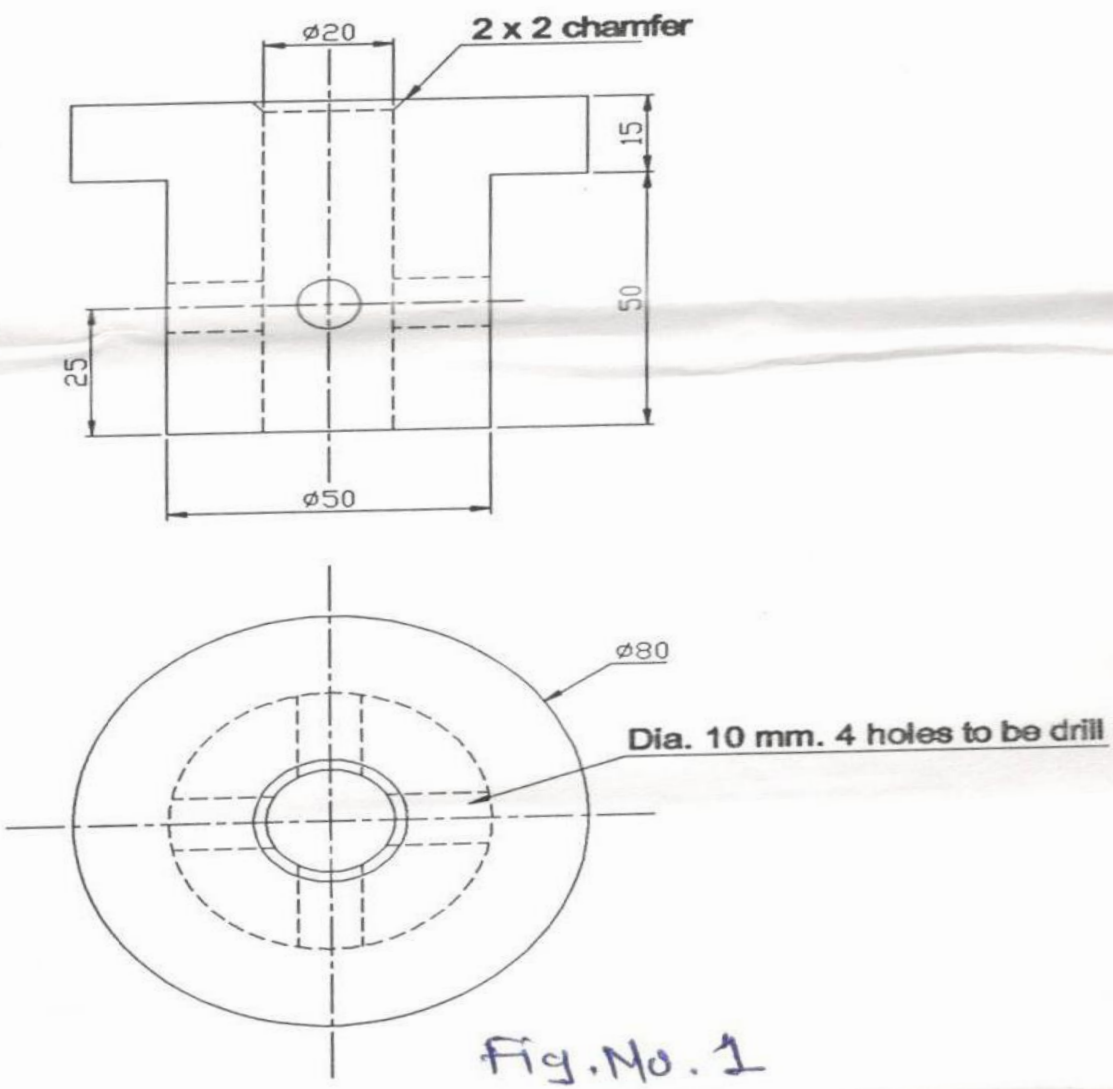

Fig. No. 1

Q.5 a) Explain in detail design principle for drill bushing. 08

b) What is mean by foot- proofing in jig design? Explain with suitable example 05

Section –B

Q.6 a) Write short note on “press terminology and press selection”. 07

b) Explain the methods used to reduce cutting forces in blanking and piercing 06

Q.7 a) Define spring back and explain how allowances may be made to compensate for its harmful effect in bending 07

b) Explain the difference between bending, forming and drawing 06

Q.8 a) Write short note on forging dies 07

b) How stock size is determined in closed die forging 06

Q.9 a) A cup without flanges and of height 10cm and diameter 5cm is to be made from sheet 2.5mm thick find the number of suitable draws 07

b) Find the center of pressure to blank a piece shown in figure 2 06

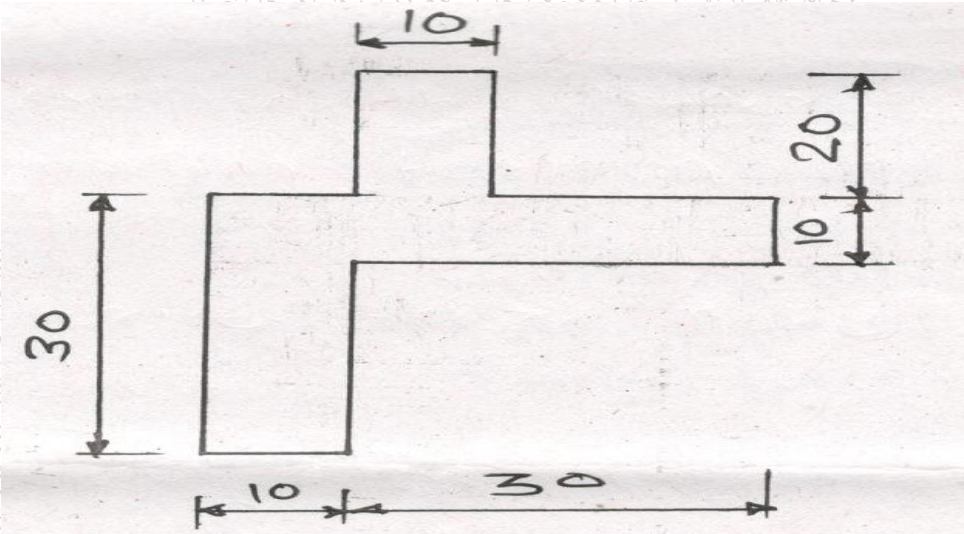

Figure 2

Q.10 Write short note on any two 14

i) shut height

ii) methods of punch holding

iii) stock stop

Total No. of Printed Pages:4

SUBJECT CODE NO: E-61
FACULTY OF ENGINEERING AND TECHNOLOGY
T.E.(Mech) Examination Nov/Dec 2017
Tool Engineering (REV.From 2015-2016 Batch)
(REVISED)

[Time: Four Hours] **[Max.Marks:80]**

Please check whether you have got the right question paper.

N.B
1) Q.4 and Q.8 are compulsory .Attempt any two questions from the remaining questions of each section
2) Use drawing sheet for Q.4
3) Assume suitable data and dimension if required
4) All dimensions are in mm

Section A

Q.1 a) The following equation for tool life has been obtained for H.S.S tool: 08

$$VT^{0.13} \; f^{0.77} \; d^{0.37}=C$$

A 60min. tool life was obtained while cutting at V=30m/min, f = 0.3 mm/rev and d = 2.5mm. Determine the effect of tool life if cutting speed, feed and depth of cut are increased by 25% individually and also taken together

b) Explain the condition recommended for the use of positive and negative rake angle in cutting tool. 04

Q.2 a) Define tool life? Explain Taylor's tool life equation in detail. Enlist the various tool life criteria. 08

b) Explain flank and crater wear 04

Q.3 a) Explain 3-2-1 principle followed in jig and fixture design ' 07

b) Define tool proofing. Explain it with suitable example 05

Q.4 Design, draw and dimensions a drill jig to drill a 4 holes of ϕ 8mm on PCD 60 in a finish component shown in fig.1 16

OR

Design draw and dimensions a milling fixture to mill a slot of 10×10mm deep in finish component shown in fig.2 16

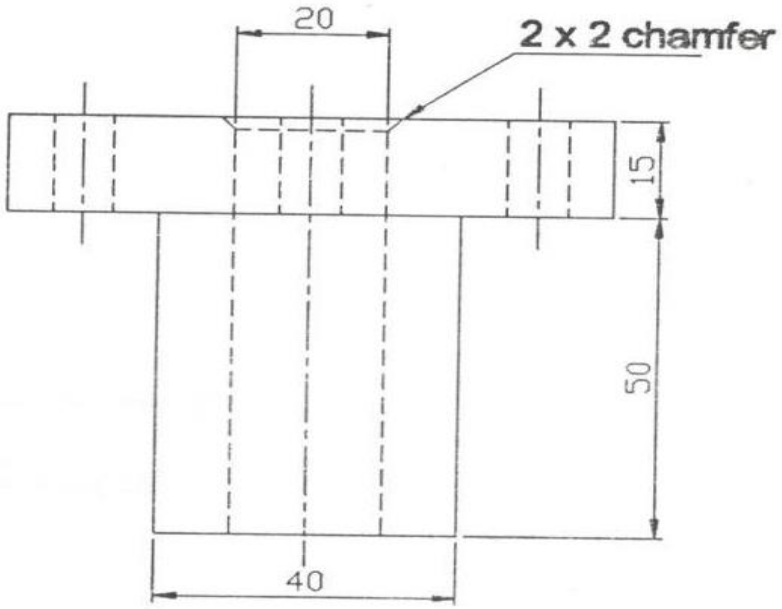

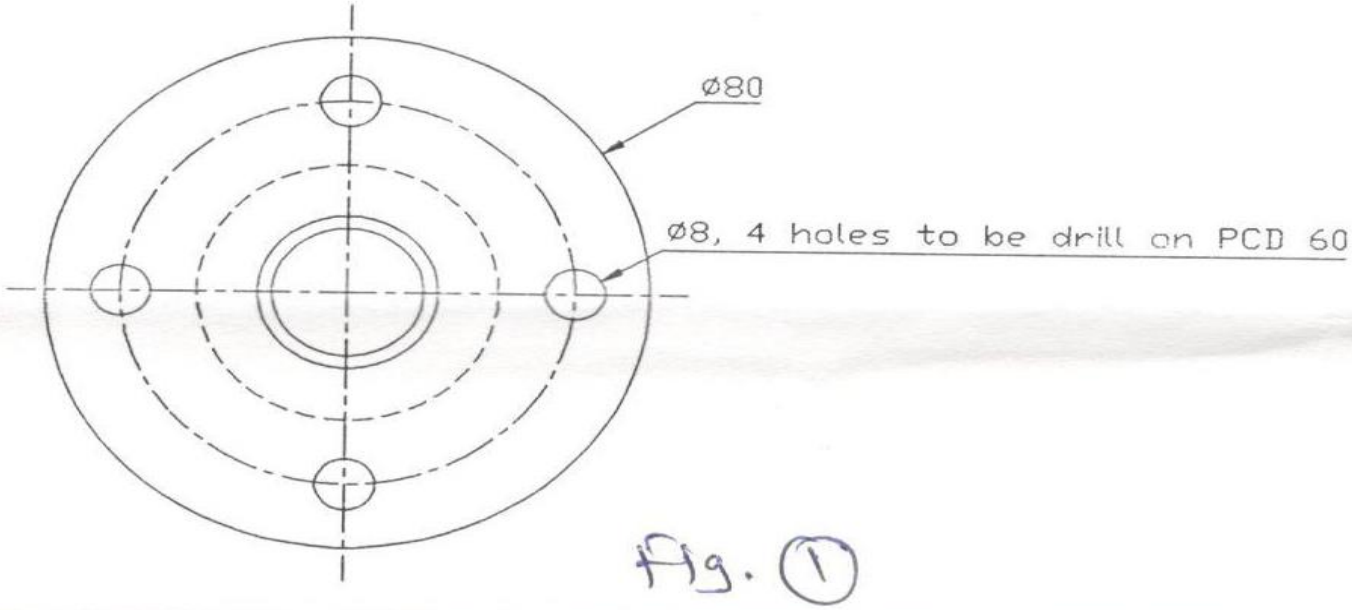

fig. (1)

2017

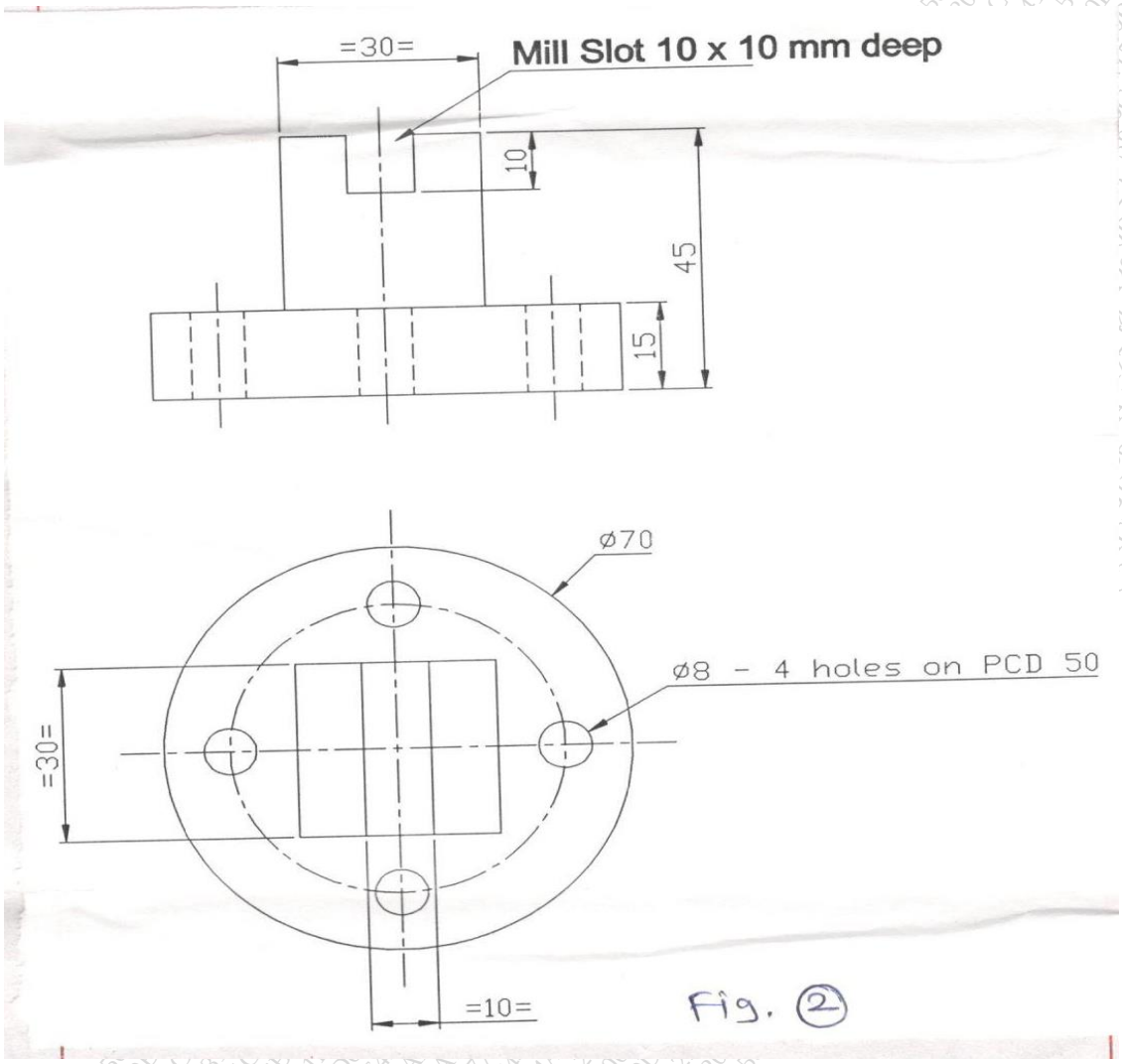

Section – B

Q.5 Draw neat sketches of the following with nomenclature of their elements (any two) 12

i) Spiral point hand tap
ii) Hand reamer ‘
iii) Peripheral milling cutter

Q.6 a) Differentiate between blanking dies and piercing dies 06

b) Explain the principle of metal cutting in sheet metal working 06

Q.7 a) Why more than one draw is needed to draw a cup? How to calculate required number of draws? 06

b) Write short note on V- bending and U- bending 06

Q.8 a) A steel washer of 36mm outer diameter and 20mm inside diameter is to be made from 1.2mm thick sheet in one operation. If the shear stress is 400 N/mm^2 and percentages penetration is 20% calculate 16

1) Maximum punch force necessary to blank and punch the washer, if both punches operate at same time
2) Percentage reduction in punch force, if 0.5mm double shear is ground on the tool

OR

b) Figure 3 shows a symmetrical cup warkpiece with a shell height of 40mm and shell diameter of 50mm the corner radius is 1.6mm, the warkpiece material is 1020 cold rolled steel with 0.8mm thickness and tensile strength 315N/mm^2 calculate 16

i) Blank size and % reduction
ii) Draw ratio
iii) Radius on punch and die
iv) Die clearance and draw pressure

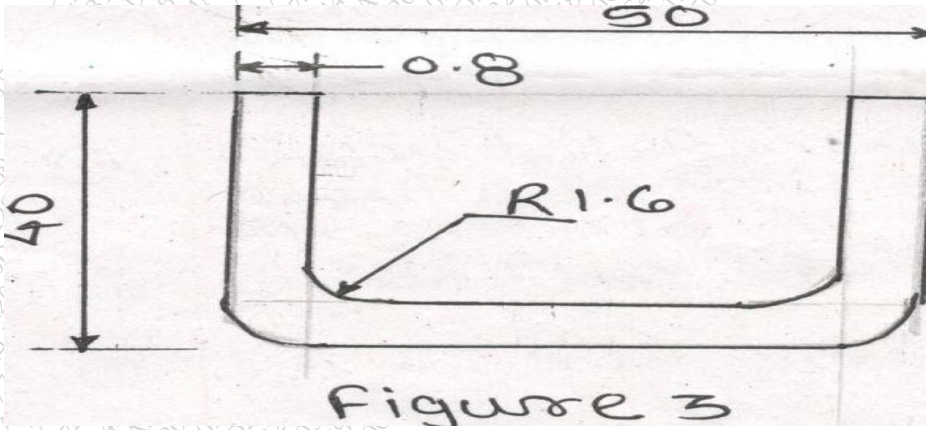

Figure 3

Total No. of Printed Pages:2

SUBJECT CODE NO: E-93
FACULTY OF ENGINEERING AND TECHNOLOGY
T.E.(Mechanical) Examination Nov/Dec 2017
CAD-CAM-CAE
(REVISED)

[Time: Three Hours] **[Max.Marks:80]**

Please check whether you have got the right question paper.

N.B
i. Answer any three questions from each section
ii. Figures to the right indicate full marks
iii. Assume suitable data wherever necessary & state it clearly.
iv. Draw neat sketches wherever required.

Section-A

Q.1 a. "The product life cycle starts with the customers and ends with the customers". Justify the above statement. 07

b. Explain the difference between sequential Engineering approach and concurrent Engineering approach for product design. 06

Q.2 a. What are ground rules for graphic software design? Explain them in brief. 07

b. Explain feature based modelling with example. 06

Q.3 A triangle ΔABC is given as its vertices A(2,2), B(8,4), and C(4,2), Express them in matrix notation and perform following transformations separately & show it on graph. 13

i) Rotation about point C anticlockwise through an angle 90°, the axis of rotation is parallel to z-axis.
ii) Reflection through X-axis.

Q.4 a. Explain the characteristics of B-spline curve. 07

b. Explain following solid representation Techniques. 06
a) Boundary representation technique
b) Constructive solid geometry techniques.

Q.5 Write short note on following (any three). 14
a. Concatenation.
b. Constraint based modeling.
c. CIM
d. I.G.E.S.
e. Display devices used in computers.

Section-B

Q.6 a. What is group Technology? Explain hierarchical type of coding system in detail. 07

b. Define FMS & explain its elements along with advantages & disadvantages. 06

Q.7 a. Explain different drives used for N.C and C.N.C. machines. 07

b. Explain concept of absolute and incremental programming with example. 06

Q.8 a. Explain the following terms with referee to a robot. 07

i) Accuracy
ii) Repeatability
iii) Work-volume

b. Explain the basic steps involved in analysis of a component using FEA Software. 06

Q.9 A profile milling operation is to be performed to generate the outline of the part as shown in fig.1. The part thickness is 20mm, cutter diameter 15mm and 800rpm, being the cutter speed. Write down the complete AAT programme. 13

p

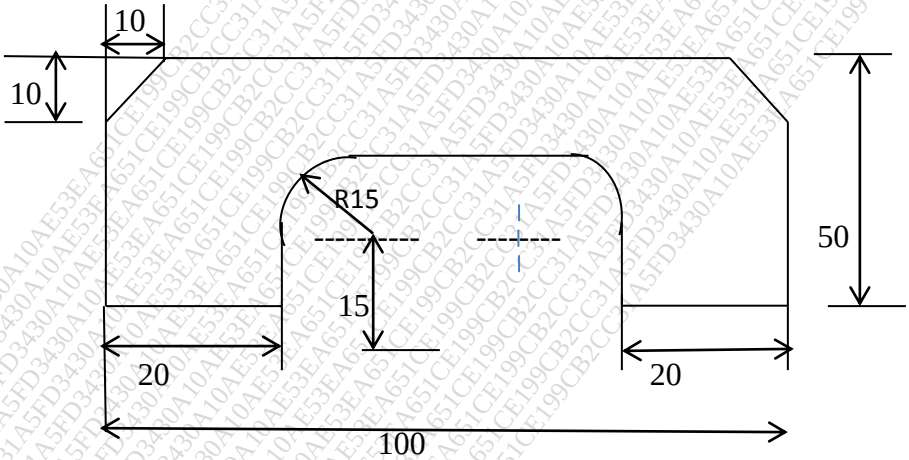

Fig.1

Q.10 Write short notes on (any two) 14

a. Co-ordinate systems for N.C/C.N.C machines axis identification
b. Inverse kinematics in robots.
c. CAP.P.

Total No. of Printed Pages:2

SUBJECT CODE NO: E-186
FACULTY OF ENGINEERING AND TECHNOLOGY
T.E.(MECH/PROD) Examination Nov/Dec 2017
Theory of Machines-II
(REVISED)

[Time: Three Hours] **[Max.Marks:80]**

Please check whether you have got the right question paper.

N.B i) Solve any three questions from each section.
ii) Assume suitable data wherever necessary.
iii) Use of non – programmable electronic calculator is permitted.

Section A

Q.1 A) Explain the term interference & undercutting. 05

B) A pinion having 30 teeth drives a gear having 80 teeth. The profile of the gears is Involute with 20° pressure angle, 12 mm module & 10 mm addendum 08
Find:- 1) length of path contact
2) Arc of contact
3) Contact ratio

Q.2 A) Explain helical gear & clearly define normal pitch & axial pitch in connection With helical gear. 05

B) In a spiral gear drive connecting two shafts, the approximate centre distance is 400mm & speed ratio =3. The angle between the two shaft is 50^0 & the normal pitch is 18mm. The spiral angle for the driving and driven wheels are equal 08
Find :- 1) Number of teeth on each wheel
2) Exact centre distance.
3) Efficiency of the drive, if friction angle = 6°

Q.3 A) What is the function of governor? Give detail classification of governor. 05

B) A Porter governor has all four equal arms 250mm long. The upper arm is attached on the Axis of rotation and the lower arms are attached to the sleeve at a distance of 30 mm from the axis. The mass of each ball is 5kg & a Sleeve has a mass of 50 Kg. The extreme Radii of rotation are 150 mm & 200 mm. Determine the range of speed of the governor. 09

Q.4 A) What are the different important term used in governor? 05

B) Explain fluctuation of energy & fluctuation of speed in case of fly wheel. 08

Q.5 A) Explain the effect of gyroscopic couple on aeroplane. 05

B) The turbine rotor of a ship has a mass of 3500kg. It has radius of gyration of 0.45m & a speed of 3000 rpm clockwise when 100 King from stern. Determine the gyroscopic couple and its effect upon ship: 08

1. When ship steering to the left on a curved of 100m radius at a speed of 36 Km/h.
2. When ship pitching in a simple harmonic motion, the bow falling with its Maximum velocity. The period of pitching is 40 seconds and total angular Displacement between two extreme positions of pitching is 12 degrees.

SECTION B

Q.6 A) Derive the expression for torque transmitting capacity of single plate clutch considering Uniform wear theory. 06

B) A multi – disc clutch has three discs on the driving shaft and two on the driven-shaft. The outside diameter of the contact surface is 240mm and inside diameter120 mm. Assuming uniform wear & coefficient of friction as 0.3, finds the maximum axial intensity of pressure between the discs for transmitting 25 Kw at 1575 r.p.m. 08

Q.7 A) What are the different factors upon which the selection of belt drive depends? Give The types of belt drive. 05

B) A shaft rotating at 200 r.p.m. drives another shaft at 300 r. p. m. and transmit 6Kw Through a belt. The belt is 100 mm wide & 10 mm. thick. The distance between the shaft is 4m. the smaller pulley is 0.5 m in diameter. Calculate the stress in the belt if it is (i) an open belt drive (ii) a cross belt drive Take $\mu = 0.3$. 08

Q.8 A) Explain the working of seismic instrument for measurement of vibration. 05

B) Determine the undamped natural frequency of a spring mass system. 08

Q.9 A) What are the different causes & effects of vibration 05

B) Derive the equation of motion & natural frequency for a simple pendulum using energy method. 08

Q.10 Write a short note on:

A) Slip & Creep of belt 04

B) Friction laws 05

C) Multiplate clutch. 04

Total No. of Printed Pages:2

SUBJECT CODE NO:- E-212
FACULTY OF ENGINEERING AND TECHNOLOGY
T.E. (MECH/PRODD) Examination Nov/Dec 2017
Metallurgy & Materials
(REVISED)

[Time: Three Hours] **[Max.Marks:80]**

Please check whether you have got the right question paper.

N.B
i. Solve any three questions from each section
ii. Figures to the right indicate full marks
iii. Assume suitable data wherever required.
iv. Draw suitable diagram if required

Section A

Q.1 a) What is meant by Miller indices? Outline the method of obtaining Miller indices in a cubic crystal. 07

b) Define Atomic packing factor and find out atomic packing factor for FCC. 06

Q.2 a) What is meant by solid solution and explain their types. 06

b) Draw and label Iron-Iron carbide diagram and explain phases in it. 07

Q.3 a) Explain full annealing heat treatment process and give its objective. 07

b) Write a short note on carburizing 06

Q.4 a) Describe briefly the following line defects: 07
i) Edge dislocation
ii) Screw dislocation

b) Explain Austempering process 06

Q.5 Write short note on (Any two) 14
a) Solid solution Strengthening
b) TTT diagram
c) Jominy End quench test.

Section B

Q.6	a)	Classify the steel on the basis of carbon content. Give its properties and application.	07
	b)	What is free cutting steel? Why is it called so? Explain.	06
Q.7	a)	What is effect of alloying elements on microstructure or C.I.?	07
	b)	What is tool steel and explain high carbon high chromium (HCHC) steels?	06
Q.8	a)	What is α −brass? Explain different important brasses from this group.	07
	b)	Write a note on "properties and application of Aluminium and its alloys"	06
Q.9	a)	State the properties of ceramic material and give its application.	07
	b)	What is composite? Explain carbon-carbon composite.	06
Q.10		Write a note on (<u>any two</u>)	14

a) Malleable cast iron
b) Bronze and its alloy
c) Glasses fits properties and application

Total No. of Printed Pages:03

SUBJECT CODE NO: E-252
FACULTY OF ENGINEERING AND TECHNOLOGY
T.E.(Mech) Examination Nov/Dec 2017
Fluid Mechanics [only for Part-I]
(REVISED)-II

[Time: Three Hours] **[Max.Marks:80]**

Please check whether you have got the right question paper.

N.B
i. Attempt any three questions from each section.
ii. Assume suitable data, if necessary.
iii. Draw a neat labeled sketch wherever necessary.

SECTION-A

Q.1 a) A cubical block weighing 4.5 N and having a 40cm edge is allowed to slide down an inclined plane surface making an angle of 30° with the horizontal on which there is a uniform layer of oil 0.005 cm thick. 06

If the expected steady state velocity of the block is 12.5 cm/s, determine the viscosity of the oil. Also express the kinematic viscosity in stokes if the oil has mass density of 800 kg/m^3.

b) A hollow wooden cylinder of specific gravity 0.56 has an outer diameter of 60cm and an inner diameter of 30 cm. it is required to float in oil of specific gravity 0.85. calculate the maximum height of the cylinder so that it shall be stable when floating with its axis vertical. Also calculate the depth to which it will sink. 07

Q.2 a) Derive 3 dimensional continuity equation in Cartesian co-ordinates for a steady incompressible flow. 08

b) Check whether the flow defined by stream function $\psi = 2xy$ is irrotational? If so, determine the corresponding velocity potential. 05

Q.3 a) A 30 cm diameter pipe carries water under a head of 20 meters (both at inlet and outlet) with a velocity of 3.5 m/s. If the axis of the pipe turns through45°, find the magnitude and direction of the resultant force on the bend. 10

b) List the limitations of Bernoulli' equation. 03

Q.4 a) A stone weighs 400 kN in air and when immersed in water it weighs 225 N. Calculate the volume of the stone and its relative density. 04

b) Differentiate steady flow and uniform flow. 02

c) Why is water droplet in spherical shape? Explain the phenomenon in brief. 04

d) Define Streamline. What is its significance? 03

Q.5 a) With a neat sketch explain the principle and working of pitot tube. Also derive the expression for finding velocity of flow. 07

b) Write a note on types of fluid 07

SECTION-B

Q.6 a) Determine the displacement thickness and momentum thickness in terms of the nominal boundary layer thickness δ in respect of the following velocity profiles in the boundary layer on a flat plate. $\frac{\mu}{U_0} = 2\left(\frac{y}{\delta}\right) - \left(\frac{y}{\delta}\right)^2$ 10

b) Explain boundary layer Seperation. 03

Q.7 Determine the rate of flow of water through a pipe of diameter of 20cm and length 50m when one end of the pipe is connected to a tank and other end of the pipe is open to atmosphere. The pipe is horizontal and the height of water in the tank is 4m above the Centre of the pipe. Consider all minor losses and take f=0.009 in $h_f = \frac{4flV^2}{2dg}$. Draw HGL (hydraulic gradient line) and TGL(Total energy line) 13

Q.8 The resistance R experienced by a partially submerged body depends upon the velocity V, length of the body 1, viscosity of the fluid μ, density of the fluid ρ and gravitational acceleration g. obtain a dimensionless expression for R using Buckingham's pie theorem and Rayleigh's method of dimensional analysis. 13

Q.9 a) For the velocity profile in laminar boundary layer as 10

$$\frac{u}{U} = \frac{3}{2}\left(\frac{y}{\delta}\right) - \frac{1}{2}\left(\frac{y}{\delta}\right)^3$$

Find the thickness of the boundary layer and the shear stress 1.5m from the leading edge of a plate. The plate is 2m long and 1.4m wide and is placed in water which is moving with a velocity of 200 mm per second. Find the total drag force on the plate if $\mu\ for\ water = 0.01\ poise$.

b) Differentiate distorted and non-distorted model. 03

Q.10 Write short notes on any one of the following 14

a. Significance of non-dimensional numbers
b. Various losses in pipes
c. Reynold's Experiment.

Total No. of Printed Pages:02

SUBJECT CODE NO: E-253
FACULTY OF ENGINEERING AND TECHNOLOGY
T.E.(Mech) Examination Nov/Dec 2017
Fluid Mechanics & Machinery
(REVISED)-I

[Time: Three Hours] **[Max.Marks:80]**

Please check whether you have got the right question paper.

N.B
i. Attempt any three questions from each section.
ii. Assume suitable data, if necessary.
iii. Draw a neat labeled sketch wherever necessary.

SECTION-A

Q.1 a) A 15 cm diameter vertical cylinder rotates concentrically inside another cylinder of diameter 15.10 cm. both cylinders are 25 cm high. The space between the cylinders is filled with a liquid whose viscosity is unknown. If a torque of 12 Nm is required to rotate the inner cylinder at 100 rpm, determine the viscosity of the fluid. 06

b) A rectangular plate 0.6 m wide and 1.2 m deep is submerged in an oil bath of specific gravity 0.8. The maximum and minimum depths of the plate are 1.6m and 0.75m from the free surface. Calculate the hydrostatic force on one face of the plate and the depth of Centre of pressure. 07

Q.2 250 liters per second of water is flowing in a pipe having a diameter of 30cm. if the pipe is bent by 135°, find the magnitude and direction of resultant force on the bend. The pressure of water flowing in the pipe is 400kPa. 13

Q.3 Show that the power P developed in a water turbine can be expressed as: 13

$$P = \rho N^3 D^5 \emptyset[\frac{D}{B}, \frac{\rho D^2 N}{\mu}, \frac{ND}{\sqrt{gH}}, \frac{H}{D}]$$

Where D and B are the diameter and width of the runner, N is the speed in revolutions per minute, H is the operating head, μ *and* ρ are respectively the coefficient of dynamic viscosity and mass density of the liquid.

Q.4 a) Show by Rayleigh's method of dimensional analysis that the resistance F to the motion of a sphere of diameter D moving with a uniform velocity V through a real fluid of density ρ and viscosity μ is given by 07

$$F = \rho D^2 V^2 f(\frac{\mu}{VD_\rho})$$

b) A stone weighs 400 kN in air and when immersed in water it weighs 225N. Calculate the volume of the stone and its relative density. 06

Q.5 Write short note on any two of the following questions. 14

a) Need for CFD
b) Types of fluid
c) Assumptions of Bernoulli's equation.

SECTION-B

Q.6 a) A nozzle of 5cm diameter delivers a stream of water at 20 m/s perpendicular to a plate that moves away from the jet at 5 m/s. Find the force on the plate, the work done and efficiency of jet. 07

b) With the help of neat sketch explain the principle, working of Francis turbine. 06

Q.7 a) The internal and external diameters of the impeller of a centrifugal pump are 200 mm and 400 mm respectively. The pump is running at 1200 rpm. The vane angles of the impeller at inlet and outlet are 20° and 30° respectively. The water enters the impeller radially and velocity of floe is constant. Determine the work done by the impeller per unit weight of water. 09

b) Define 04

1) suction head
2) Delivery head
3) Manometric head
4) Static head on centrifugal pump

Q.8 a) The hub diameter of a Kaplan turbine working under a head of 12m, is 0.35 times the diameter of the runner. The turbine is running at 100 rpm. If the vane angle of the extreme edge of the runner at outlet is 15 ° and flow ratio is 0.6. The velocity of whirl at outlet is given as zero. Find : 08

1) Diameter of the runner
2) Diameter of the boss
3) Discharge through the runner.

b) Explain the construction and working of Hydraulic press. 05

Q.9 a) Differentiate between Pelton, Francis and Kaplan turbine. 03

b) Define 06

1) Cavitation
2) Net positive suction head (NPSH)
3) Priming

c) Explain the significance of Draft tube. 04

Q.10 Write short notes on any two of the following questions. 14

a. Hydraulic crane
b. Effect of number of vanes on impeller
c. Performance characteristics of hydraulic turbine.

Total No. of Printed Pages:2

SUBJECT CODE NO:- E-293

FACULTY OF ENGINEERING AND TECHNOLOGY

T.E.(Mechanical) Examination Nov/Dec 2017

Industrial Management & Engineering Economics.

(REVISED)

[Time: Three Hours] **[Max.Marks:80]**

Please check whether you have got the right question paper.

N.B
1. Attempt any three from each section.
2. Figures to the right indicate full marks.
3. Assume suitable data, if necessary and state them clearly.

Section A

Q.1	a)	Discuss the different forces (factors) driving knowledge management?	07
	b)	List down the various functions of management and explain any one in detail?	06
Q.2	a)	Discuss the concept and process of Management by Objectives (MBO)?	07
	b)	Define TQM? Discuss the benefits of implementing TQM?	06
Q.3	a)	Explain matrix organization with its advantages and disadvantages?	07
	b)	Compare a partnership organization and a sole proprietorship?	06
Q.4	a)	Explain recruitment process with its objectives? State factors affecting it?	07
	b)	Elaborate the different strategies (ways) followed in case of surplus of employees in an organization?	06
Q.5		Write short notes on any three:-	
	a)	Six Sigma	05
	b)	Management of Change	05
	c)	Line Organization	04
	d)	Objectives of Trade Union	04
	e)	Functions of Human Resource Management	04

Section B

Q.6	a)	Explain ABC analysis for inventory control with help of an example?	07
	b)	Discuss the importance of financial management?	06
Q.7	a)	Define and give an example for Micro and Macro Analysis?	07
	b)	Explain Law of Supply with the help of an example?	06
Q.8	a)	What is perfect competition? Explain in detail with the help of diagram?	07
	b)	Define the terms Scarcity, Resources and Wants?	06

Q.9 a) A drilling machine was purchased for Rs. 50,000/-. Its useful life was estimated as 10 years and salvage value Rs 5,000/-. Using diminishing balance method, calculate the depreciation ratio. Also estimate the depreciation fund for two years. 08

b) Define depreciation. Explain in details the causes of depreciation. 05

Q.10 Write short notes on any three:-

a) Monopoly. 05

b) Economic principles for management decision. 05

c) Element of costs. 04

d) IIR method. 04

e) Payback Period. 04

Total No. of Printed Pages:3

SUBJECT CODE NO:- E-336
FACULTY OF ENGINEERING AND TECHNOLOGY
T.E.(MECH/PROD) Examination Nov/Dec 2017
Design of Machine Elements-I
(REVISED)

[Time: Three Hours] **[Max.Marks:80]**

Please check whether you have got the right question paper.

N.B
1. Solve any three questions from each section.
2. Figure to right indicate full marks.
3. Assume suitable data if required and state it clearly.

Section A

Q.1 a) What are the different mechanical properties of metal? Explain any three 06

b) Explain basic steps of machine design. 07

Q.2 a) What is shaft? Derive the equation for shaft subjected to bending moment only. 05

b) A mild steel bracket as shown I figure 1 is subjected to pull of 5500 N acting at 45^0 to horizontal axis. The bracket has rectangular section whose depth is twice the thickness. Find the cross-sectional dimensions of bracket if the permissible stress in material of bracket is limited to 50 MPa. 08

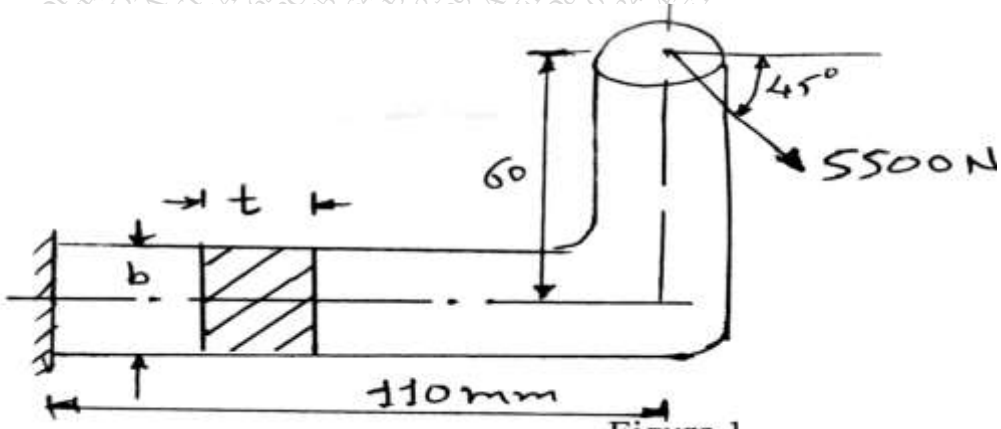

Figure 1.

Q.3 Draw a neat sketch and explain in detail design procedure of knuckle joint. 13

Q.4 a) What is function of key? What are different types of keys? 05

b) Explain in detail design procedure of rigid flange coupling. 08

Q.5 Write a short note on.(Any two) 14

1. Eccentric load acting parallel to the axis of the bolt
2. Aesthetic and Ergonomic consideration in design
3. Write the designation of following.
   a) 15C8
   b) FeE220
   c) Fe310
   d) XT75W18Cr4V1

Section B

Q.6 a) What is function of spring? What are different types of springs? 05

b) A loaded narrow gauge rail car weighting 2200 Kg and moving at 1.3 m/s velocity is brought to rest by a bumper consist of two helical compression springs of spring index 6. In bringing rail car to rest both the bumper spring gets compressed by 150 mm, spring steel has permissible shear stress of 425 N/mm^2 and $G = 84*10^3 N/mm^2$ 08

i. Determine diameter of spring wire
ii. Mean coil diameter
iii. Number of turns of spring coil
iv. Free length
v. Solid length

Q.7 A simply supported beam has a concentrated load at the center which fluctuates from a value of P to 4P. the span of beam is 490 mm and its cross section is circular with a diameter of 58 mm. taking for the beam material an ultimate stress of 700 Mpa, yield stress of 500 Mpa, endurance limit of 325 Mpa for reverse bending and a factor of safety as 1.4, calculate the maximum value of P by using Soderberg and Goodman equation. Take a size factor of 0.85, surface finish factor 0.9 13

Q.8 A bracket as shown in figure 2 is to carry a load of 50 KN. Determine the size of the rivet if the shear stress is not to exceed 45 Mpa. Assume all rivets of the same size 13

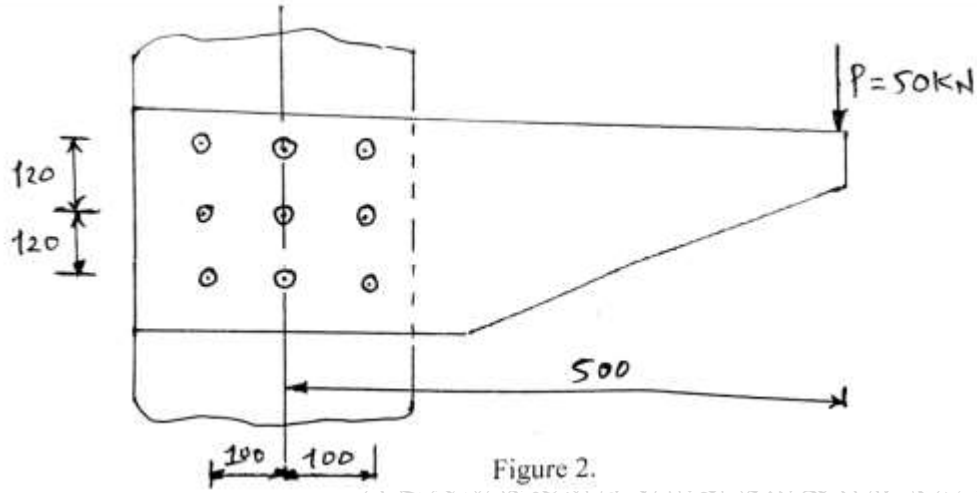

Figure 2.

Q.9 a) Describe the different factors that affects on endurance limit. 06

b) Derive the resultant shear load equation for eccentrically loaded riveted joint. 07

Q.10 Write a short note on. (Any two) 14

i) Surge in spring and method to eliminate it
ii) Caulking and fullering
iii) Nipping of leaf spring